IP Kontakt
Pl. Zwycięstwa 2E
90-312 Łódź
Poland
tel. +48 42 676 75 25
+48 42 674 22 74
+48 42 674 22 88
e-mail: *ipkontakt@ipkontakt.pl*

WSLT-9 - Wire Saddle, Locking Top Quarter-Turn Base

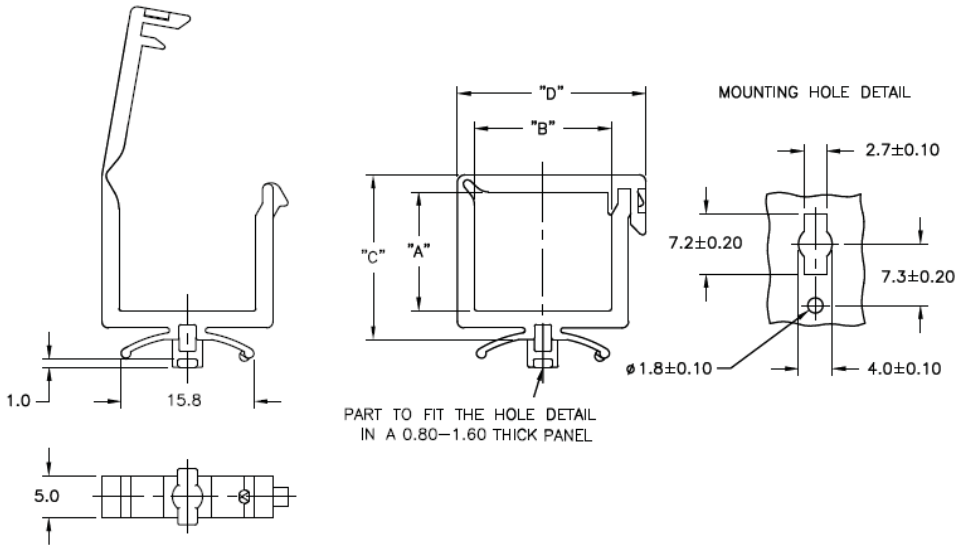



Details:

- **Nylon 6/6, UL 94 V-2, RMS-01 ***
- **Nylon 6/6, UL 94 V-0, RMS-19 ***
- **Color:** natural
- **Standard pack:** 1000/Back

Symbol	A	B	C	D	Material	Flammability	Color
	[mm]	[mm]	[mm]	[mm]			
WSLT-9-01-2-01	9.1	10.7	14.4	16.8	PA 66	UL94 V-2	natural