IP Kontakt
Pl. Zwycięstwa 2E
90-312 Łódź
Poland
tel. +48 42 676 75 25
+48 42 674 22 74
+48 42 674 22 88
e-mail: *ipkontakt@ipkontakt.pl*

WSLT - Micro Wire Saddle, Locking Top

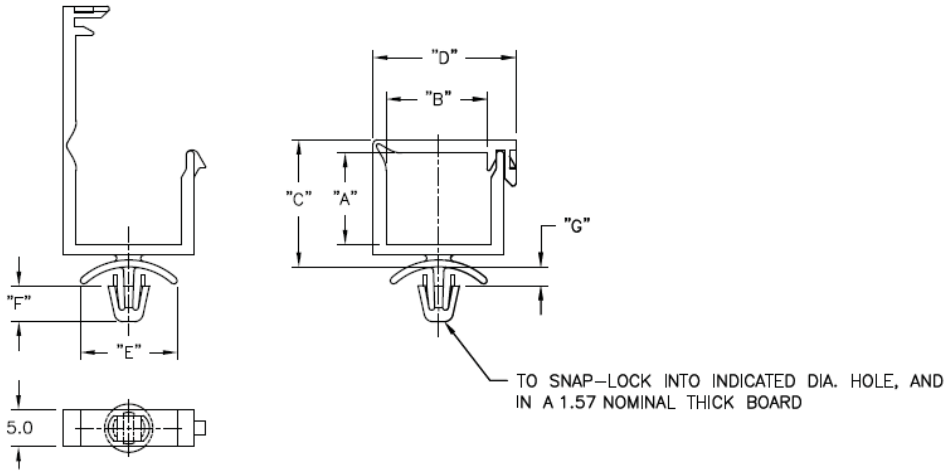



Details:

- **Nylon 6/6, UL 94 V-2, RMS-01* or Nylon 6/6, UL 94 V-0, RMS-19 ***
- **Color: natural**
- Standard pack: 1000 pcs

Symbol	A	B	C	D	E	F	G	Mounting hole diameter	Material	Flammability	Color
	[mm]	[mm]	[mm]	[mm]	[mm]	[mm]	[mm]	[mm]			
WSLT-03-2-19	14.1	16.3	19.6	22.4	14.3	5.6	2.8	4.75	PA 66	UL94 V-0	natural