IP Kontakt
Pl. Zwycięstwa 2E
90-312 Łódź
Poland
tel. +48 42 676 75 25
+48 42 674 22 74
+48 42 674 22 88
e-mail: *ipkontakt@ipkontakt.pl*

WSBH - Wire Saddle with Blind Hole Mount

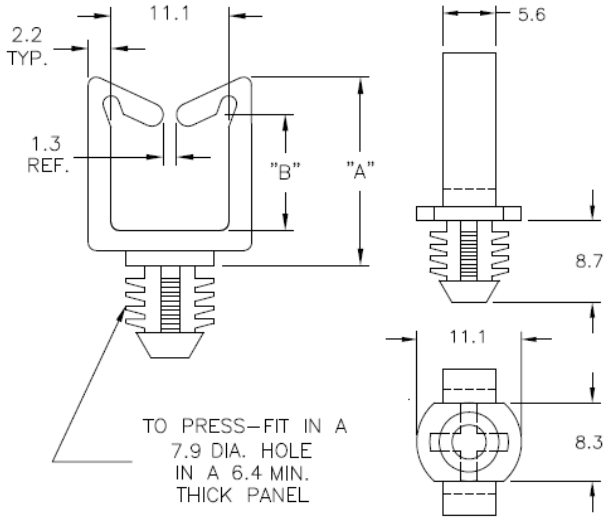



Details:

- **Material: Nylon 6/6, UL 94 V-2, RMS-01 * or Nylon 6/6, UL 94 V-0, RMS-19 ***
- Color: natural
- Mounting hole: 7.9 mm
- Panel thickness: 6.4 mm
- Standard pack: 1000/Back

Symbol	A	B	Mounting hole diameter	Panel thickness range	Material	Flammability	Color
	[mm]	[mm]	[mm]	[mm]			
WSBH-2-19	18.3	8.6	7.9	6.4 min.	PA 66	UL94 V-0	natural