IP Kontakt
Pl. Zwycięstwa 2E
90-312 Łódź
Poland
tel. +48 42 676 75 25
+48 42 674 22 74
+48 42 674 22 88
e-mail: *ipkontakt@ipkontakt.pl*

WIT-RA/SA - Arrowhead Ties

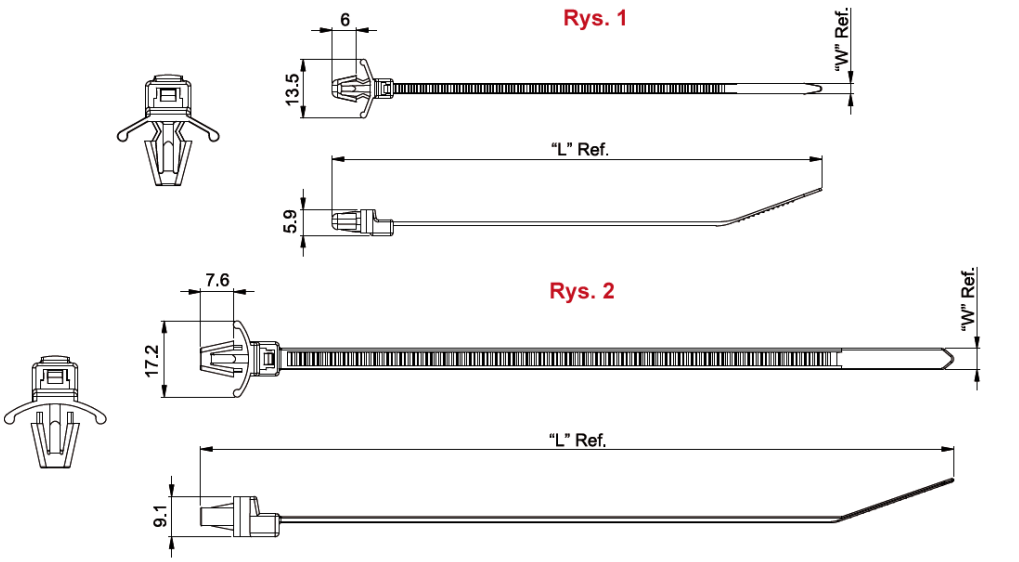



Details:

- **Nylon 6/6, UL94 V-2, RMS-01 ***
- **UVB Nylon 6/6, UL94 V-2, RMS-46 ***
- **Color:** NAT - natural, BK - black

Symbol	Fig.	Tensile strength	Length L	Max. cable bundle diameter	Width W	Mounting hole diameter range	Panel thickness range	Standard pack	MoQ [pcs]	Material	Flammability	Color
		[daN]	[mm]	[mm]	[mm]	[mm]	[mm]	[szt./pcs]				
WIT-50SRA-01-HT	1	22	173	36	4.8	6.4	1.6	1000	50000	PA 46	UL94 V-2	natural