IP Kontakt
Pl. Zwycięstwa 2E
90-312 Łódź
Poland
tel. +48 42 676 75 25
+48 42 674 22 74
+48 42 674 22 88
e-mail: *ipkontakt@ipkontakt.pl*

WIT-30RCA - Cupped Cable Ties

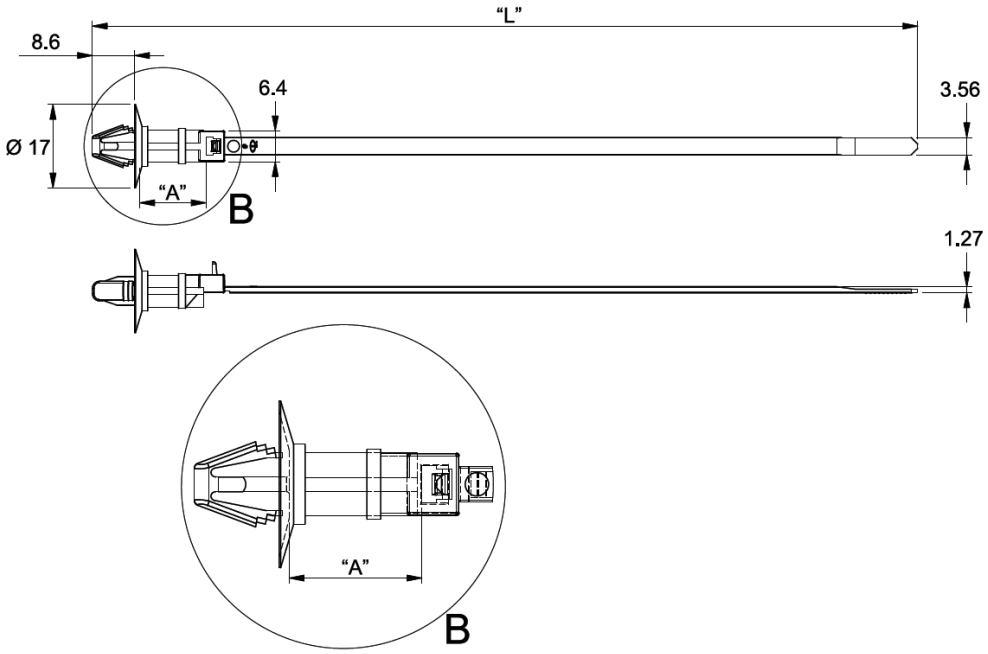

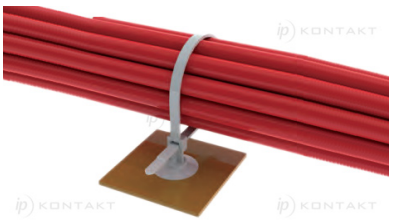

Details:

- **Material: UL94 V-2, Nylon 6/6, RMS-01***
- **Material: UL94 V-2, UV Stabilized Nylon 6/6, RMS-46***
- **Material: UL94 V-2, Heat Stabilized Nylon 6/6, RMS-47***
- **Material: UL94 V-0, Nylon 6/6, RMS-19***
- **Color: see table**
- **Standard Pack: 1000/Bag**

Symbol	Tensile strength	Length L	Max. cable bundle diameter	A	Mounting hole diameter range	Panel thickness range	Material	Flammability	Color
	[daN]	[mm]	[mm]	[mm]	[mm]	[mm]			
WIT-30RCA-4-M	13	160.7	31.8	7.1	6.0 - 6.5	0.6 - 2.5	PA 66	UL94 V-2	natural