IP Kontakt
Pl. Zwycięstwa 2E
90-312 Łódź
Poland

tel. +48 42 676 75 25
+48 42 674 22 74
+48 42 674 22 88
e-mail: *ipkontakt@ipkontakt.pl*

VD - Vibration and Shock Dampening Spacers

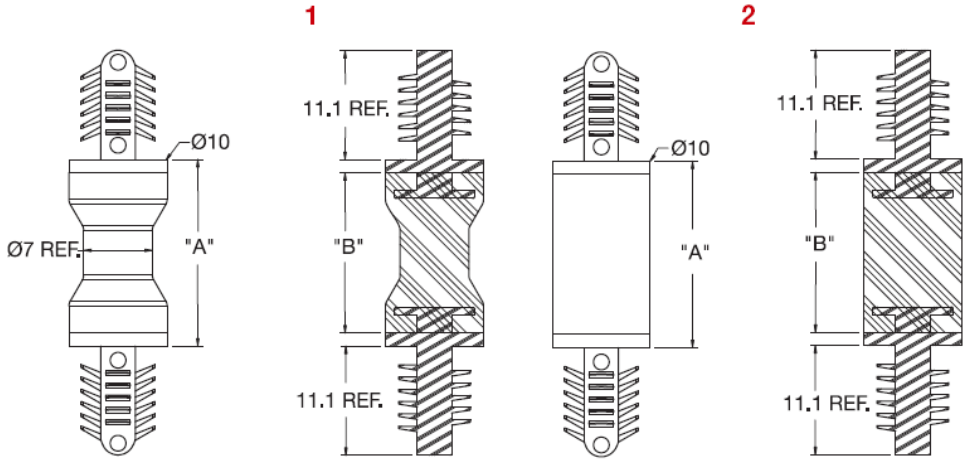

Details:

- **Fix material: UL94 V0 Nylon 6/6, RMS-169*; Color: natural**
- **Spacer material: UL94 HB TPE 35 Shore A, RMS-167*; Color: black**
- **Standard pack: 1000/Bag**

Symbol	Height A ±0.8	B	Max. load	Type	Top mounting hole dia. ±0.08	Top panel thickness range	Bottom mounting hole dia. ±0.08	Bottom panel thickness range
	[mm]	[mm]	[N]		[mm]	[mm]	[mm]	[mm]
VD-2	18.5	16.3	4.4	1	6.35	1.8 - 7.9	6.35	1.8 - 7.9