IP Kontakt
Pl. Zwycięstwa 2E
90-312 Łódź
Poland
tel. +48 42 676 75 25
+48 42 674 22 74
+48 42 674 22 88
e-mail: *ipkontakt@ipkontakt.pl*

TRM - Mini Tough Snap Rivets

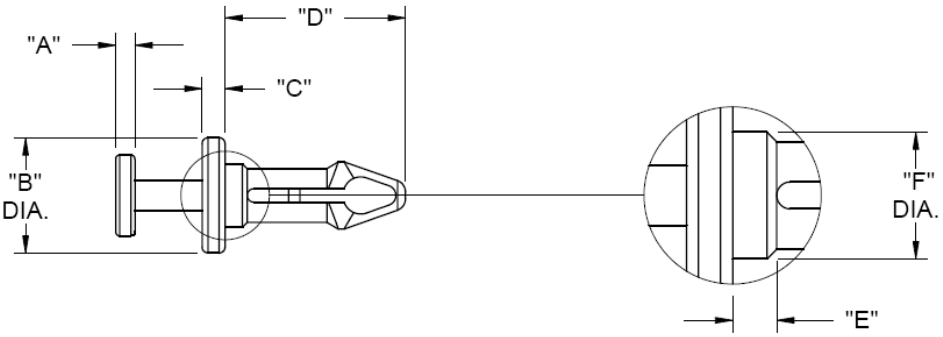



Details:

- **Material: UL94 V2 Heat Stabilized Nylon 6/6, RMS-47***
- **Color: Black**
- **Standard Pack: 1000/Bag**

Symbol	Mounting hole diameter range	Panel thickness range	A ±0.25	B ±0.25	C ±0.25	D ±0.25	E	Material	Flammability	Color
	[mm]	[mm]	[mm]	[mm]	[mm]	[mm]	[mm]			
TRM-6	3.1 - 3.3	6.1 - 6.7	1.3	5.5	1.5	11.6	-	PA 66	UL94 V-2	black