**IP Kontakt**
Pl. Zwycięstwa 2E
90-312 Łódź
Poland
tel. +48 42 676 75 25
+48 42 674 22 74
+48 42 674 22 88
e-mail: *ipkontakt@ipkontakt.pl*

# TOBS - Adhesive/Screw Mount Tie

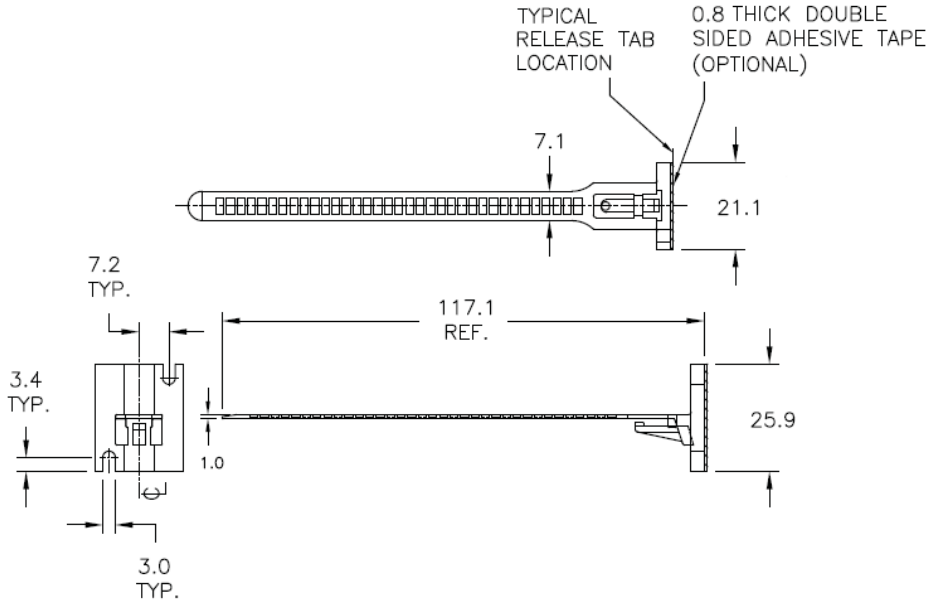




Details:

- **Material: UL94 V-2 Nylon 6/6, RMS-01***
- **Color: Black**
- **0.8 Thick Acrylic Adhesive Tape, RMS-15***
- Standard Pack: 1000/Bag

| Symbol | Max. cable bundle diameter [mm] | Type | Material | Flammability | Color |
|---|---|---|---|---|---|
| TOBS-18-01 | 28.5 | hole mounted | PA 66 | UL94 V-2 | natural |