IP Kontakt
Pl. Zwycięstwa 2E
90-312 Łódź
Poland
tel. +48 42 676 75 25
+48 42 674 22 74
+48 42 674 22 88
e-mail: *ipkontakt@ipkontakt.pl*

TB - Threaded Insert Bumper

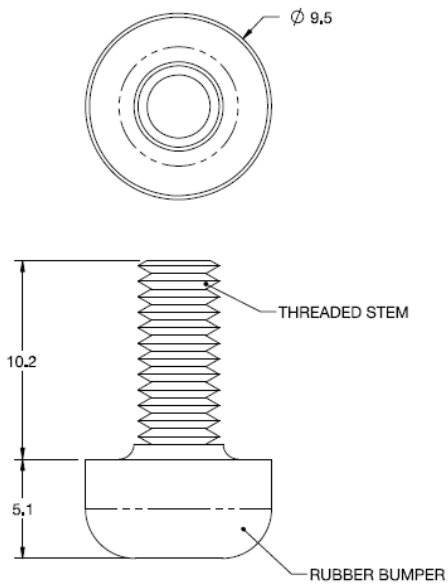



Details:

- **Material: Rubber Bumper: IIR, Shore 40-50A Durometer, RMS-348***
- **Threaded Stem: Brass, RMS-349***
- **Color: Black**
- Standard Pack: 100/Bag

Symbol	Thread	Material	Color
TB-1	UNC 6-32	rubber	black