IP Kontakt
Pl. Zwycięstwa 2E
90-312 Łódź
Poland
tel. +48 42 676 75 25
+48 42 674 22 74
+48 42 674 22 88
e-mail: *ipkontakt@ipkontakt.pl*

T-SOWR - Tilt adjustable feet

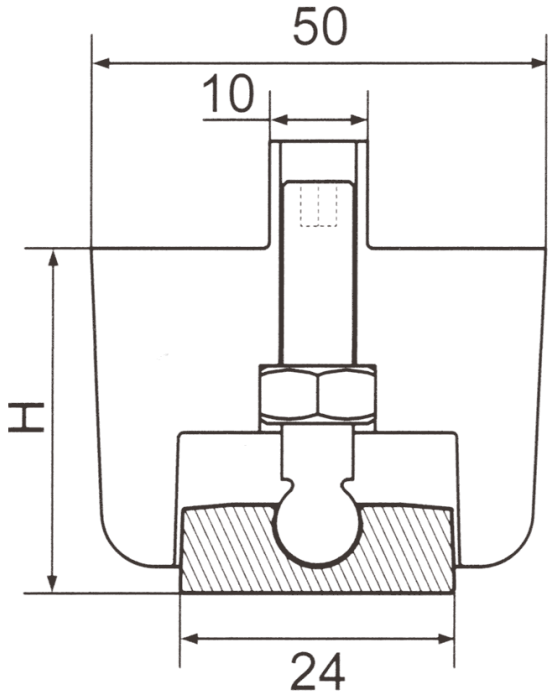

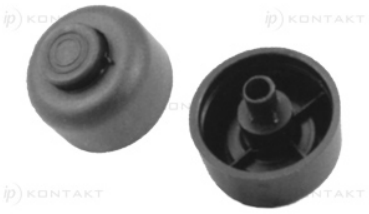

Details:

- **Material: PP**
- **Color: black (RAL 9005)**
- Height (H) can be adjusted with 4 mm hexagonal wrench.

Symbol	H	Material	Color
	[mm]		
T-SOWR-64-L	27.0 - 40.0	PP	black