IP Kontakt
Pl. Zwycięstwa 2E
90-312 Łódź
Poland
tel. +48 42 676 75 25
+48 42 674 22 74
+48 42 674 22 88
e-mail: *ipkontakt@ipkontakt.pl*

T-SOW - Round feet, screw mounted



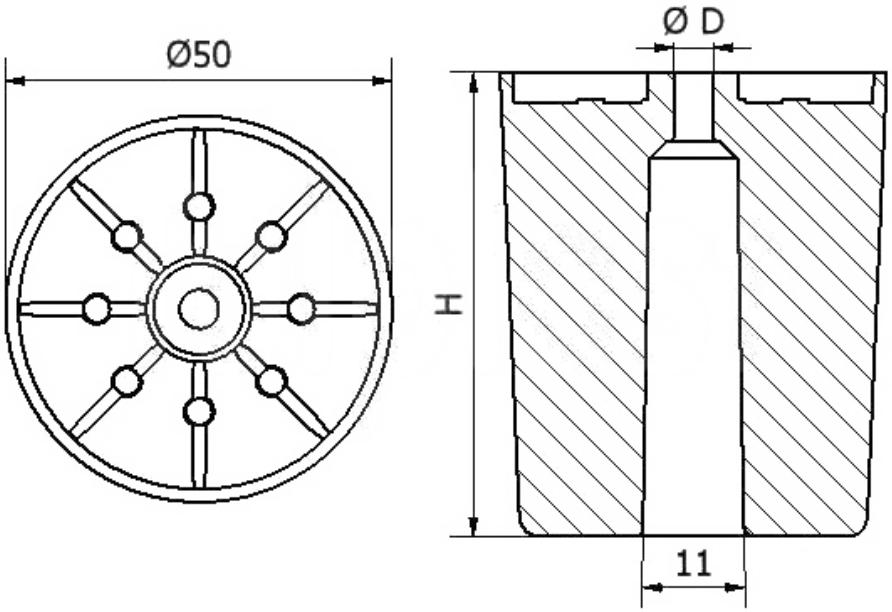

Details:

- **Material: PP**
- **Color: black (RAL 9005)**
- **Screw mounted**
- **Used in furniture**

Symbol	Ext. diameter	Height H	ØD	Material	Color
	[mm]	[mm]	[mm]		
T-SOW-25	50	25	5	PP	black