IP Kontakt
Pl. Zwycięstwa 2E
90-312 Łódź
Poland
tel. +48 42 676 75 25
+48 42 674 22 74
+48 42 674 22 88
e-mail: *ipkontakt@ipkontakt.pl*

SRHR - Snap Rivet Heat Resistant



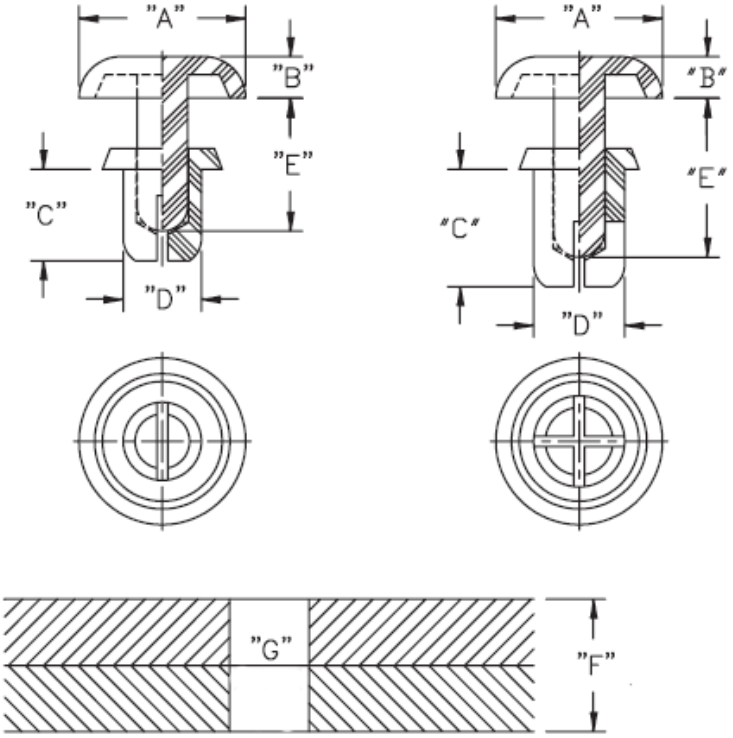

Details:

- **Material: UL94 V2 Nylon 4/6, RMS-109***
- **Color: Tan**
- Working temperature upto: +152°C
- Standard Pack: 1000/Bag

Symbol	Mounting hole diameter range G	Panel thickness range F	A ±0.2	B ±0.2	C ±0.3	D	E ±0.3	Material	Flammability	Color
	[mm]	[mm]	[mm]	[mm]	[mm]	[mm]	[mm]			
SRHR-3545	3.6 - 3.7	2.2 - 3.1	6.4	1.6	4.5	3.5	6.1	PA 46	UL94 V-2	brown