IP Kontakt
Pl. Zwycięstwa 2E
90-312 Łódź
Poland
tel. +48 42 676 75 25
+48 42 674 22 74
+48 42 674 22 88
e-mail: *ipkontakt@ipkontakt.pl*

SR - Snap Rivets

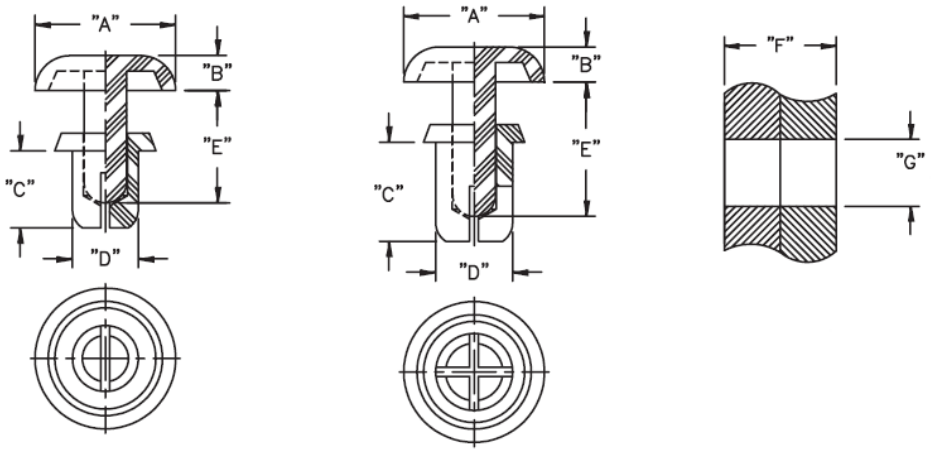



Details:

- **SR Material: UL94 V2 Nylon 6**
- **SRVO Material: UL94 V0 Nylon 6/66**
- **Standard Pack: 1000/Bag**

Symbol	Mounting hole diameter range G	Max. load	Panel thickness range F	A	B	C	D	E	Fig.	Material	Flammability	Color
	[mm]	[kg]	[mm]	[mm]	[mm]	[mm]	[mm]	[mm]				
SR-5095W	5.1 - 5.2	25	6.5 - 7.5	9	2.2	9.5	5	10.5	2	PA 66	UL94 V-2	white