IP Kontakt
Pl. Zwycięstwa 2E
90-312 Łódź
Poland
tel. +48 42 676 75 25
+48 42 674 22 74
+48 42 674 22 88
e-mail: *ipkontakt@ipkontakt.pl*

NGSE/PGSE/SNGSE/SPGSE - Continuous Grommet Strip

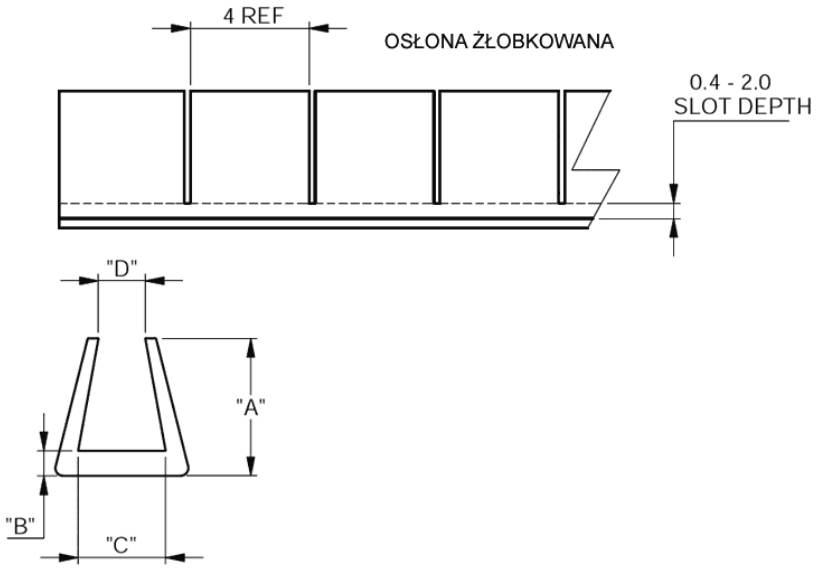

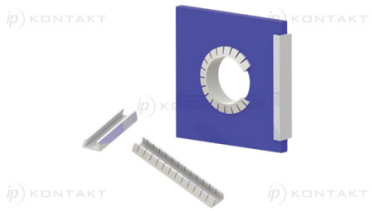

Details:

- **Material: Nylon RMS-413***
- **Material: Polyethylene RMS-412***
- **Color: Natural**
- **Standard pack: 30m roll**
- **Type 1 - solid**
- **Type 2 - serrated**

Symbol	Type	Panel thickness range	A	B	C	D	Material	Color
		[mm]	[mm]	[mm]	[mm]	[mm]		
SPGSE-2	2	0.9 - 1.8	4.4	0.8	3.4	0.6	LDPE	natural