IP Kontakt
Pl. Zwycięstwa 2E
90-312 Łódź
Poland
tel. +48 42 676 75 25
+48 42 674 22 74
+48 42 674 22 88
e-mail: *ipkontakt@ipkontakt.pl*

SOF - Screw on Feet

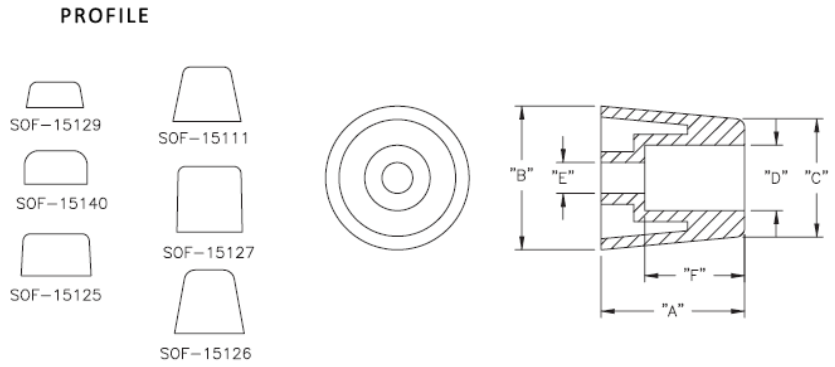



Details:

- **Material: Neoprene Rubber, RMS-190***
- **Color: Black**
- Standard Pack: 100/Bag

Symbol	Height A	Ext. diameter B	C	D	E	F	Material	Color
	[mm]	[mm]	[mm]	[mm]	[mm]	[mm]		
SOF-15127	18.35	18.5	-	8	4.8	6.35	TPR	black