**IP Kontakt**
Pl. Zwycięstwa 2E
90-312 Łódź
Poland
tel. +48 42 676 75 25
+48 42 674 22 74
+48 42 674 22 88
e-mail: *ipkontakt@ipkontakt.pl*

# NGSE/PGSE/SNGSE/SPGSE - Continuous Grommet Strip

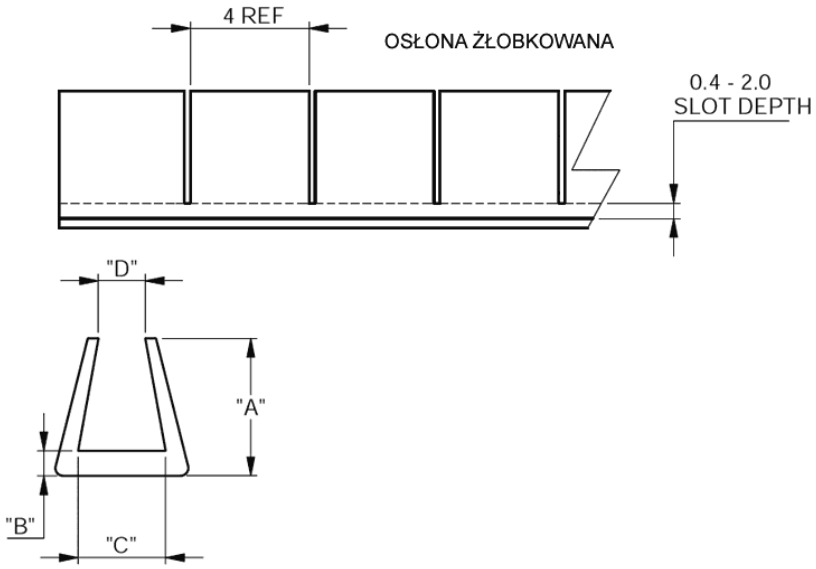


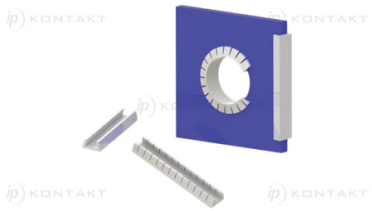

Details:

- **Material: Nylon RMS-413***
- **Material: Polyethylene RMS-412***
- **Color: Natural**
- **Standard pack: 30m roll**
- **Type 1 - solid**
- **Type 2 - serrated**

| Symbol | Type | Panel thickness range | A | B | C | D | Material | Color |
|---|---|---|---|---|---|---|---|---|
| | | [mm] | [mm] | [mm] | [mm] | [mm] | | |
| SNGSE-4 | 2 | 4.2 - 4.7 | 2.8 | 1.2 | 4.8 | 4.2 | PA 6 | natural |