IP Kontakt
Pl. Zwycięstwa 2E
90-312 Łódź
Poland
tel. +48 42 676 75 25
+48 42 674 22 74
+48 42 674 22 88
e-mail: *ipkontakt@ipkontakt.pl*

SFF - Soft Fast Foot

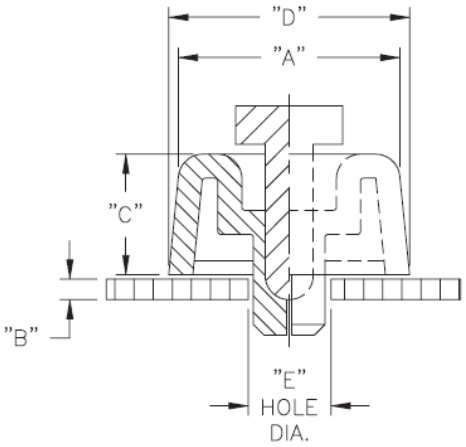



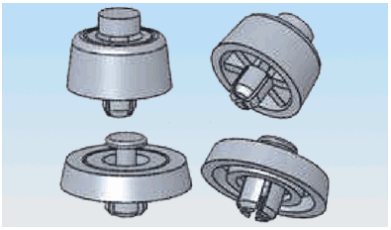

Details:

- **Material: Foot: TPE, 86 Shore A, RMS-42***
- **Pin: Polypropylene, RMS-126***
- **Color: Black**
- Standard Pack: 100/Bag

Symbol	A	Panel thickness range B	Height C	Ext. diameter D	Mounting hole diameter E	Material	Flammability	Color
	[mm]	[mm]	[mm]	[mm]	[mm]			
SFF-023	23	0.8 - 1.5	5	25	7.75	TPE	UL94 V-2	black