IP Kontakt
Pl. Zwycięstwa 2E
90-312 Łódź
Poland
tel. +48 42 676 75 25
+48 42 674 22 74
+48 42 674 22 88
e-mail: *ipkontakt@ipkontakt.pl*

RSSHG - Single Sided Horizontal Card Guide

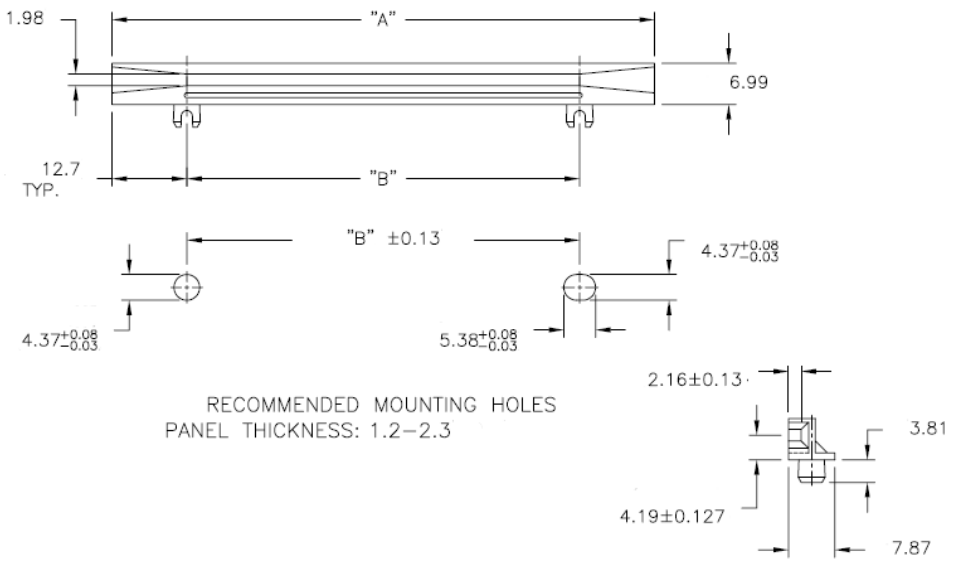



Details:

- **Material: UL94 V0 Nylon 6/6, RMS-66***
- **Color: Black**
- **Standard Pack: 500/Bag**

Symbol	Length A ±0.4	B ±0.4	Material	Flammability	Color
	[mm]	[mm]			
RSSHG-551-165	139.7	114.3	PA 66	UL94 V-0	black