IP Kontakt
Pl. Zwycięstwa 2E
90-312 Łódź
Poland
tel. +48 42 676 75 25
+48 42 674 22 74
+48 42 674 22 88
e-mail: *ipkontakt@ipkontakt.pl*

RNS/LB - Nylon Strap and Locking Button

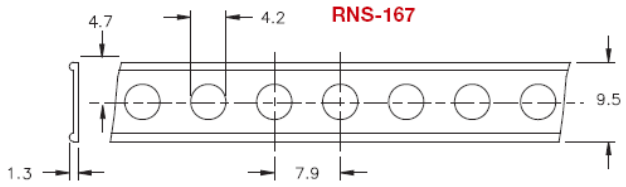

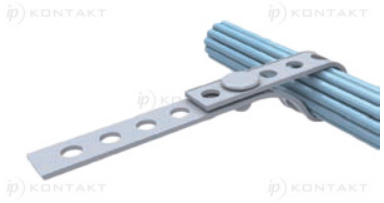

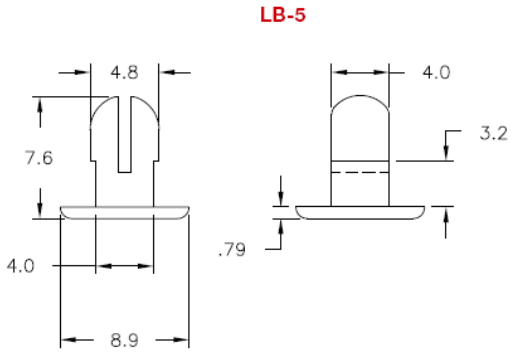

Details:

- **Nylon 6/6, UL94 HB, RMS 17 ***
- **Nylon 6/6, UL94 V-2, RMS 01 ***
- **Color: black**
- Standard pack: **LB-5** - 100 [pcs], **RNS-167** - 100 ft (30m)

Symbol	Description	Material	Flammability	Color	Standard pack	Standard pack
					[m]	[szt./pcs]
RNS-167	perforated tape	PA 66	UL94 HB	black	30	-