IP Kontakt
Pl. Zwycięstwa 2E
90-312 Łódź
Poland
tel. +48 42 676 75 25
+48 42 674 22 74
+48 42 674 22 88
e-mail: *ipkontakt@ipkontakt.pl*

O-ZW - Body plugs

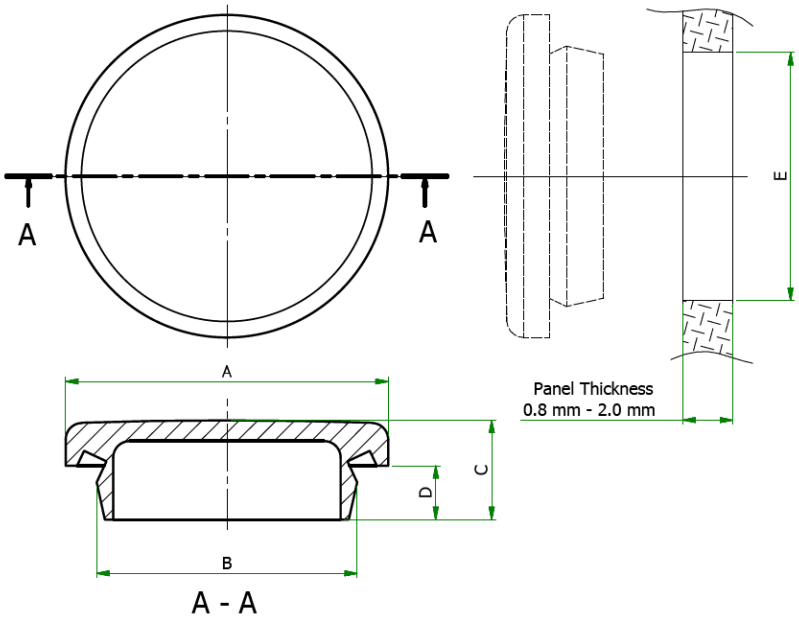



Details:

- **Material: TPR**
- **Color: black**
- **Quick to fit**
- **Each size covers a range of panel thicknesses**
- **Withstand temperatures between -40°C and +135°C**

Symbol	Head diameter A	B	C	D	Mounting hole diameter E	Panel thickness range	Material	Color	Standard pack
	[mm]	[mm]	[mm]	[mm]	[mm]	[mm]			[szt./pcs]
O-ZW-45	54	48	13	8	45	0.8 - 2.0	TPR	black	1000