**IP Kontakt**
Pl. Zwycięstwa 2E
90-312 Łódź
Poland
tel. +48 42 676 75 25
+48 42 674 22 74
+48 42 674 22 88
e-mail: *ipkontakt@ipkontakt.pl*

# O-ZW - Body plugs

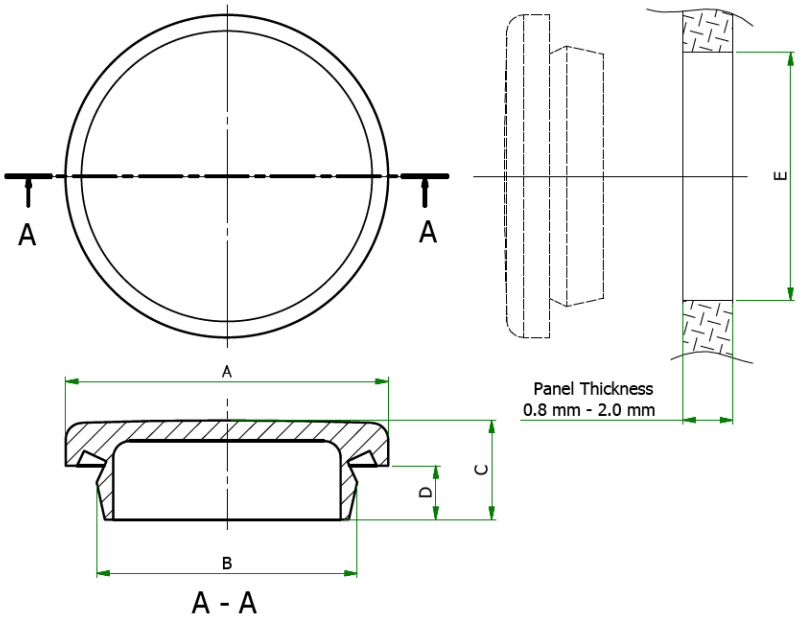




Details:

- **Material: TPR**
- **Color: black**
- **Quick to fit**
- **Each size covers a range of panel thicknesses**
- **Withstand temperatures between -40°C and +135°C**

| Symbol | Head diameter A | B | C | D | Mounting hole diameter E | Panel thickness range | Material | Color | Standard pack |
|---|---|---|---|---|---|---|---|---|---|
| | [mm] | [mm] | [mm] | [mm] | [mm] | [mm] | | | [szt./pcs] |
| O-ZW-22 | 31 | 23.5 | 12 | 6.5 | 22 | 0.8 - 2.0 | TPR | black | 2500 |