IP Kontakt
Pl. Zwycięstwa 2E
90-312 Łódź
Poland
tel. +48 42 676 75 25
+48 42 674 22 74
+48 42 674 22 88
e-mail: *ipkontakt@ipkontakt.pl*

O-ZNS - Cone cap/plug

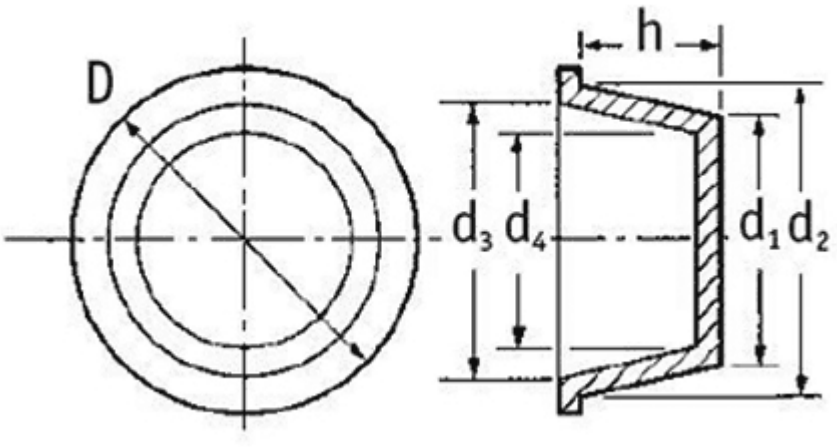



Details:

- **Material: LDPE**
- **Color: red**
- **Can be used as cap or plug**
- **Excellent protection against damage, dirt, moisture, corrosion, in production and in transport**
- **Standard pack: 1000 pcs (other quantities also available)**

Symbol	d1	d2	d3	d4	Flange diameter D	Height h	Cap	Plug	Material	Color
	[mm]	[mm]	[mm]	[mm]	[mm]	[mm]				
O-ZNS-164-183	16.4	18.3	16.9	14.3	22.2	12.3	M16. 5/8″ UNF	3/4″ UNF	LDPE	red