IP Kontakt
Pl. Zwycięstwa 2E
90-312 Łódź
Poland
tel. +48 42 676 75 25
+48 42 674 22 74
+48 42 674 22 88
e-mail: *ipkontakt@ipkontakt.pl*

O-PK - Flange Cover

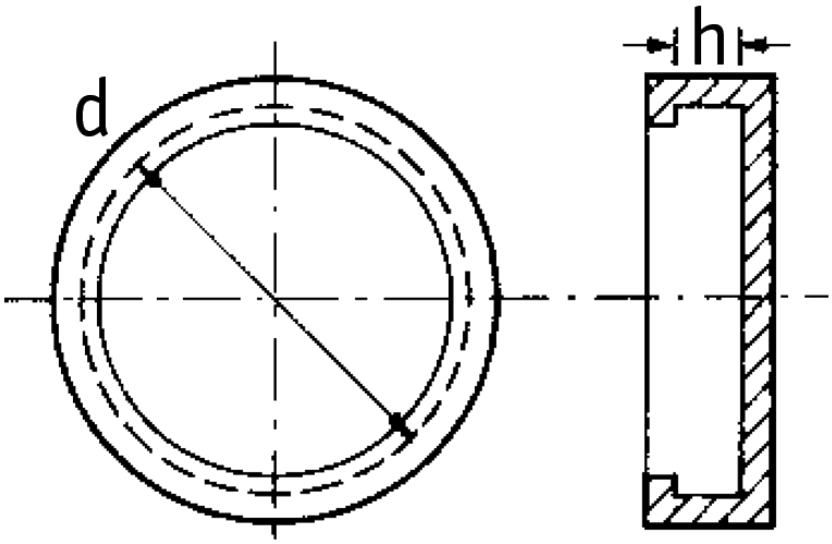

Details:

- **Material: Flexible Polyethylene**
- **Color: Yellow**
- **Ideal for protecting internally-coated flanges**
- **Provide complete all-round flange protection**
- **Cover ANSI B 16.5, DIN 26312635 and BS4504**
- **Easy to fit**
- **Durable and flexible**
- **Also protect bolt holes**
- **Suit all types of flange faces**
- **Standard pack: 100pcs**

Symbol	Nominal diameter	Nominal diameter	Series Pressure Group [bar]	Series Pressure Group [lbs]	Int. diameter d	Height h	Material	Color
	[mm]	[in]			[mm]	[mm]		
O-PK-076-730	500	-	25	-	730	40	PE	yellow