IP Kontakt
Pl. Zwycięstwa 2E
90-312 Łódź
Poland
tel. +48 42 676 75 25
+48 42 674 22 74
+48 42 674 22 88
e-mail: *ipkontakt@ipkontakt.pl*

O-OKPVC2 - PVC Edge Protector

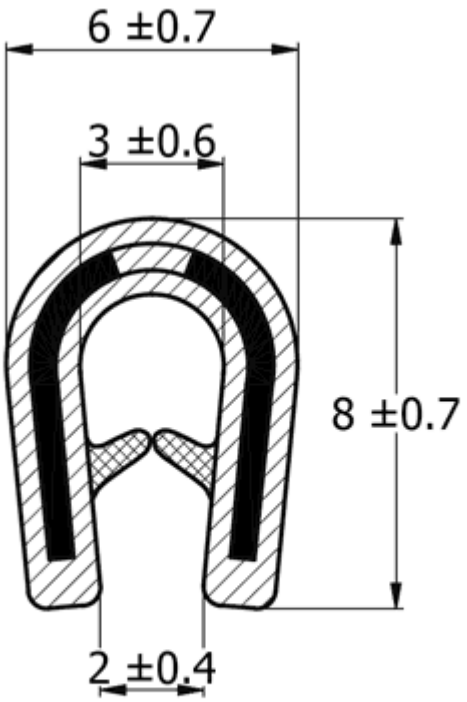

Typ 1

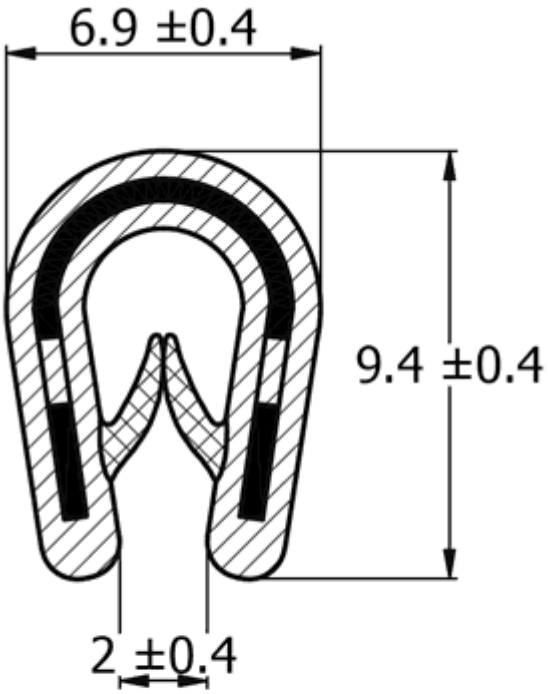

Typ 2

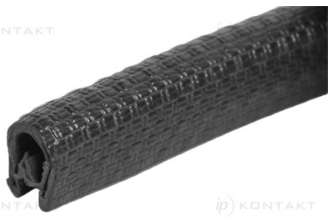

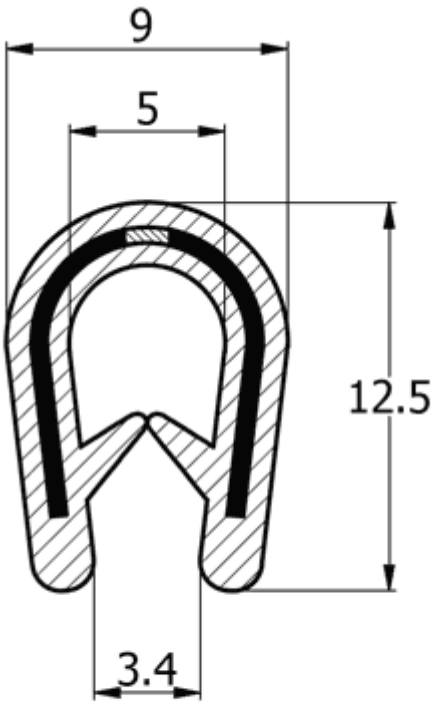

Typ 3

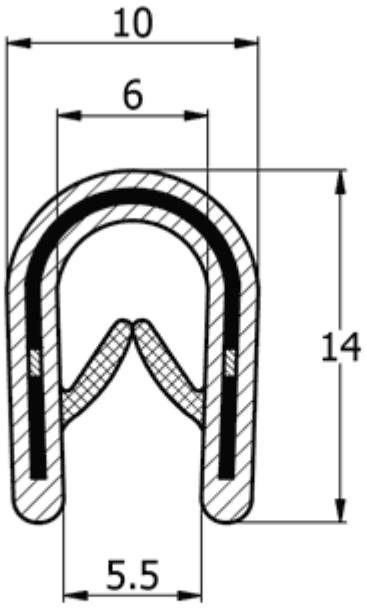

Typ 4

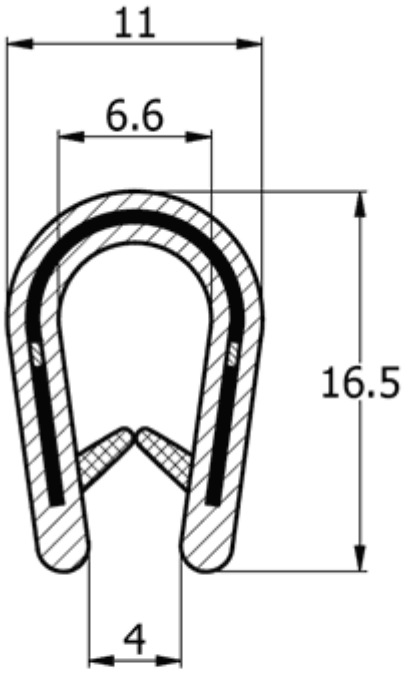

Typ 5

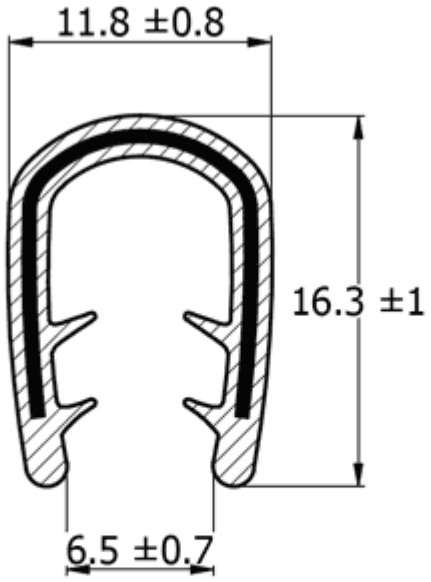

Typ 6

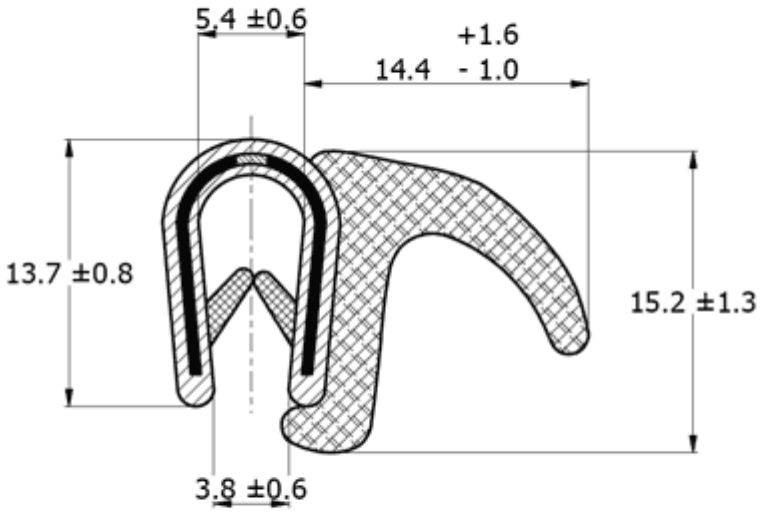
5.4 ±0.6
+1.6
14.4 - 1.0
13.7 ±0.8
15.2 ±1.3
3.8 ±0.6

Typ 7

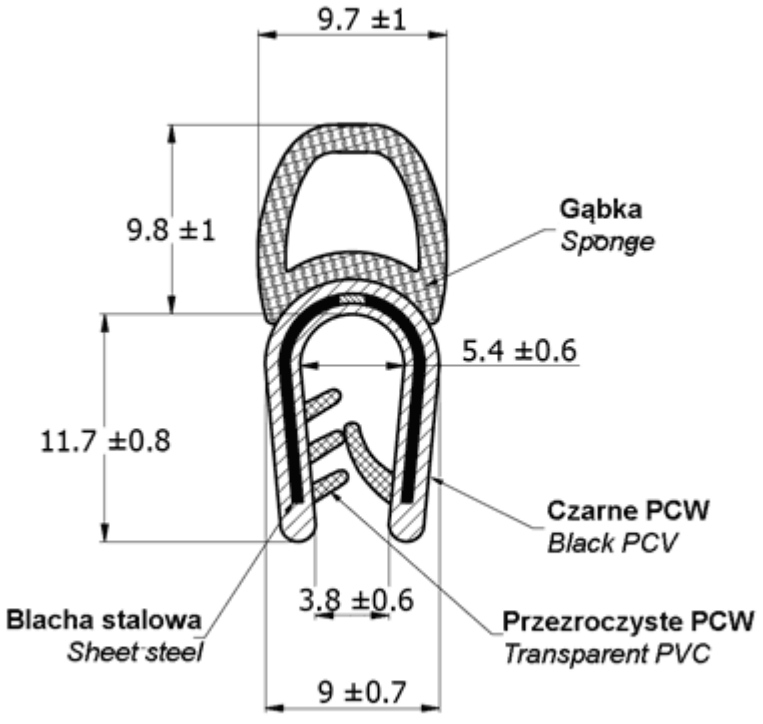
9.7 ±1
9.8 ±1
Gąbka
Sponge
5.4 ±0.6
11.7 ±0.8
Czarne PCW
Black PCV
3.8 ±0.6
Blacha stalowa
Sheet steel
Przezroczyste PCW
Transparent PVC
9 ±0.7

Typ 8

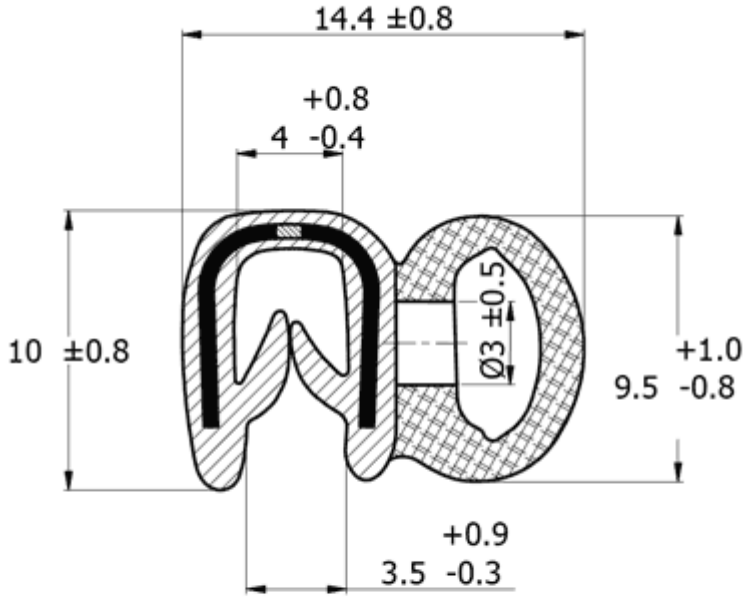

Typ 9

Details:

- **Material: PVC with steel spring core**
- **Color: Black (BLK), gray (GR), white (WH)**
- Supplied in rolls of 20m
- Provided protection to steel edges
- Profiles are flexible and pressed on by hand
- Suitable for -40°C to +90°C

Symbol	Type	Panel thickness range	Material	Color	Standard pack
		[mm]			[m]
O-OKPVC2-07-BLK	7	1 - 3	PVC	black	20