IP Kontakt
Pl. Zwycięstwa 2E
90-312 Łódź
Poland

tel. +48 42 676 75 25
+48 42 674 22 74
+48 42 674 22 88
e-mail: *ipkontakt@ipkontakt.pl*

RBF - Barbed Fasteners

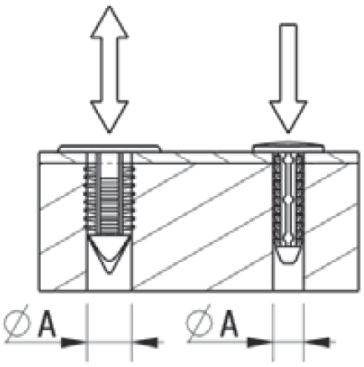

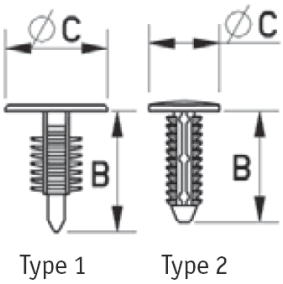

Details:

- **Material: Nylon 6.6**
- **Color: Black or natural - see table**

Symbol	Mounting hole diameter ØA	ØC	Panel thickness range	Head height	B	Type	Standard pack	Material	Color
	[mm]	[mm]	[mm]	[mm]	[mm]		[szt./pcs]		
O-BAFA-048-110-173-NAT	4.8	11	0.7 - 13.0	-	17.3	2	100	PA 66	natural