IP Kontakt
Pl. Zwycięstwa 2E
90-312 Łódź
Poland
tel. +48 42 676 75 25
+48 42 674 22 74
+48 42 674 22 88
e-mail: *ipkontakt@ipkontakt.pl*

H-FSSI - Feet with Snap-In Locking Fingers

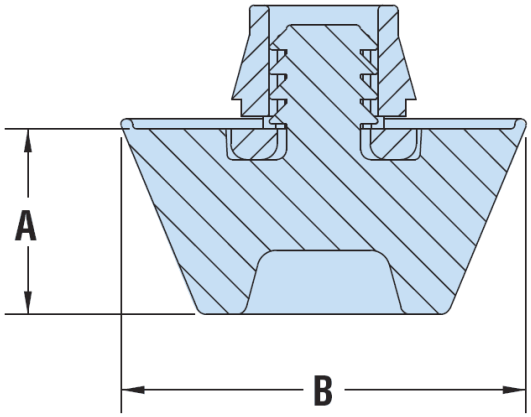



Details:

- **Material: EPDM Rubber insert, Nylon 6/6 body UL94 HB**
- **Colour: black**
- Temperature Range: -40°C to 105°C

Symbol	Ext. diameter ØA	B	Mounting hole diameter	Panel thickness range	Material	Color
	[mm]	[mm]	[mm]	[mm]		
H-G3017	6.3	20.6	7.9	0.8 - 1.6	EPDM	black