**IP Kontakt**
Pl. Zwycięstwa 2E
90-312 Łódź
Poland
tel. +48 42 676 75 25
+48 42 674 22 74
+48 42 674 22 88
e-mail: *ipkontakt@ipkontakt.pl*

# H-HC - Nylon Hose Clamp

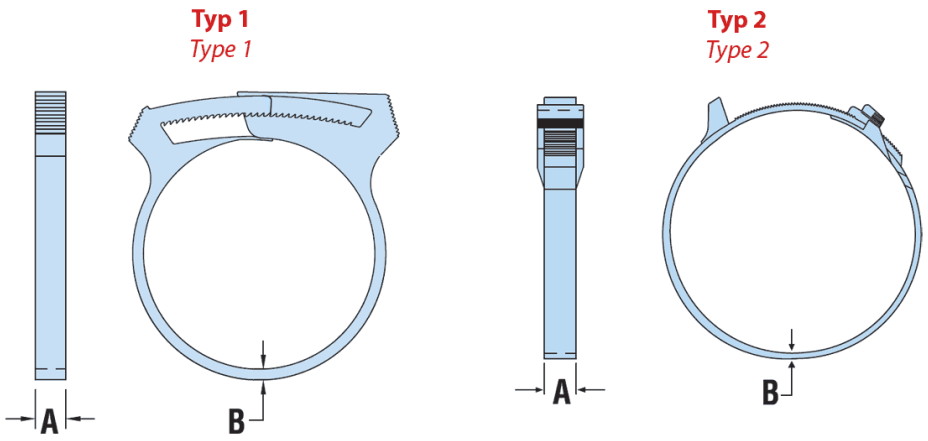




Details:

- **Materiał: Nylon 6/6 UL94 V-2 or Nylon 6/6 glass-filled UL94 HB**
- **Colour: black (BLK), white (WH)**
- Quick and easy installation. Tighten instantly with hand pliers or Air Tools
- Reusable. Can be removed without cutting.
- Glass-filled nylon clamps offer additional clamping strength.
- Lightweight yet resist corrosion, salt water, weak acids, grease, and common solvents.

| Symbol | Minimum diameter | Maximum diameter | A | B | Type | Material | Flammability | Color |
|---|---|---|---|---|---|---|---|---|
| | [mm] | [mm] | [mm] | [mm] | | | | |
| H-2383 | 88.9 | 108 | 11.2 | 2 | 2 | PA 66 + GF | UL94 HB | black |