IP Kontakt
Pl. Zwycięstwa 2E
90-312 Łódź
Poland
tel. +48 42 676 75 25
+48 42 674 22 74
+48 42 674 22 88
e-mail: *ipkontakt@ipkontakt.pl*

H-HC - Nylon Hose Clamp

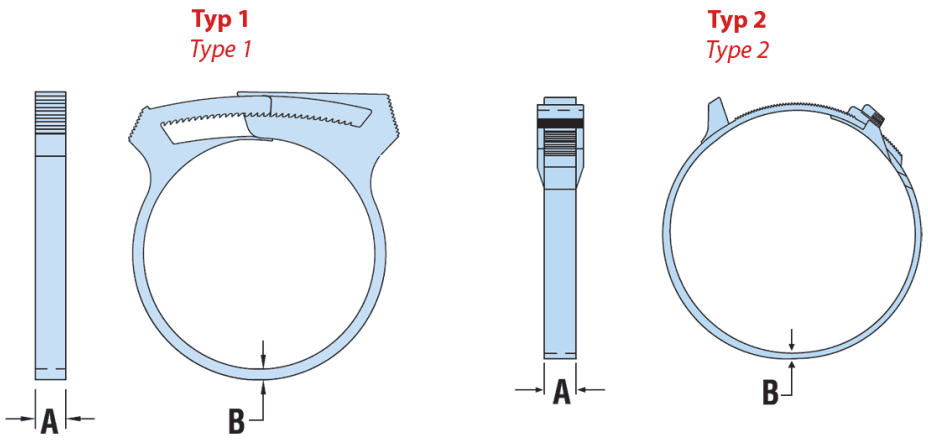



Details:

- **Materiał: Nylon 6/6 UL94 V-2 or Nylon 6/6 glass-filled UL94 HB**
- **Colour: black (BLK), white (WH)**
- Quick and easy installation. Tighten instantly with hand pliers or Air Tools
- Reusable. Can be removed without cutting.
- Glass-filled nylon clamps offer additional clamping strength.
- Lightweight yet resist corrosion, salt water, weak acids, grease, and common solvents.

Symbol	Minimum diameter	Maximum diameter	A	B	Type	Material	Flammability	Color
	[mm]	[mm]	[mm]	[mm]				
H-2367	54	60.3	10.2	1.8	1	PA 66	UL94 V-2	white