IP Kontakt
Pl. Zwycięstwa 2E
90-312 Łódź
Poland
tel. +48 42 676 75 25
+48 42 674 22 74
+48 42 674 22 88
e-mail: *ipkontakt@ipkontakt.pl*

H-DL - Latches and strikers

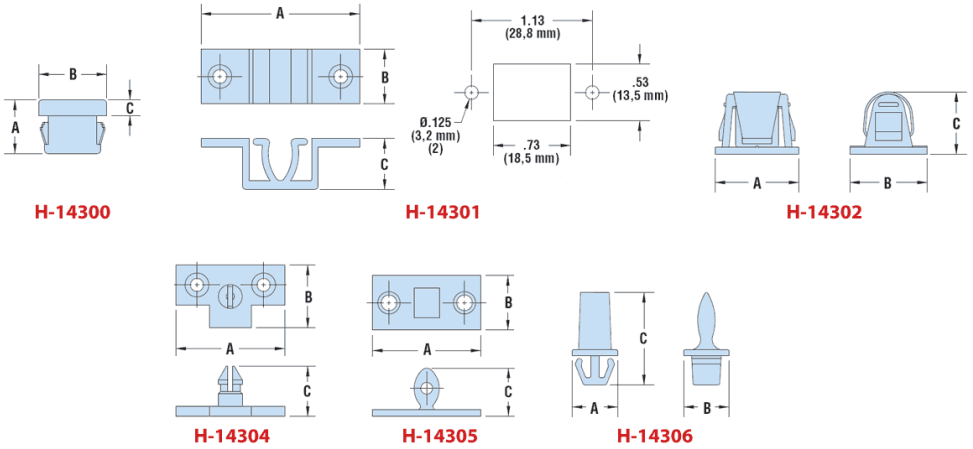



Details:

- **Material: Nylon 6/6**
- **Colour: natural**

Symbol	Mounting hole	Panel thickness range	A	B	C	Striker part no.	Material	Color
	[mm]	[mm]	[mm]	[mm]	[mm]			
H-14302	11.8 x 16.9	1.0	20	18.5	14.9	H-14306	PA 66	natural

Strikers

Part No.	Mounting hole diameter	Mounting hole separation	A	B	C	Latch part no.
	[mm]					
H-14304	3.1	15.9	26.0	15.0	12.0	H-14300
H-14305	3.2	18.0	25.8	13.0	11.4	H-14301
H-14306	7.2 x 8.5	-	10.8	11.0	20.6	H-14302