IP Kontakt
Pl. Zwycięstwa 2E
90-312 Łódź
Poland
tel. +48 42 676 75 25
+48 42 674 22 74
+48 42 674 22 88
e-mail: *ipkontakt@ipkontakt.pl*

H-CCSA - Self-Aligning Nylon Cable Clamps

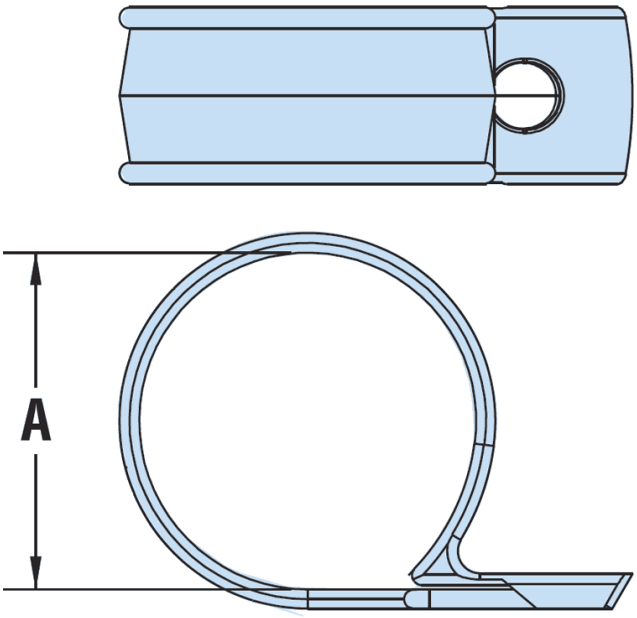



Details:

- **Material: Nylon 6/6 UL94 V-2**
- **Colour: black (BLK) or natural (NAT)**
- Temperature range: 0°C to 85°C
- Interlocking surfaces prevent the cable clamp from separating when installing the mounting screw
- Easily guide and locate wires and cables.
- Designed with rounded edges to prevent chaffing and cutting wire insulation.

Symbol	Mounting hole diameter	Max. cable bundle diameter A	Width	Thickness	Material	Flammability	Color
	[mm]	[mm]	[mm]	[mm]			
H-13062B	4.7	25.4	12.7	1.5	PA 66	UL94 V-2	black