IP Kontakt
Pl. Zwycięstwa 2E
90-312 Łódź
Poland
tel. +48 42 676 75 25
+48 42 674 22 74
+48 42 674 22 88
e-mail: *ipkontakt@ipkontakt.pl*

FCCS - Snap In Flat Cable Clamp

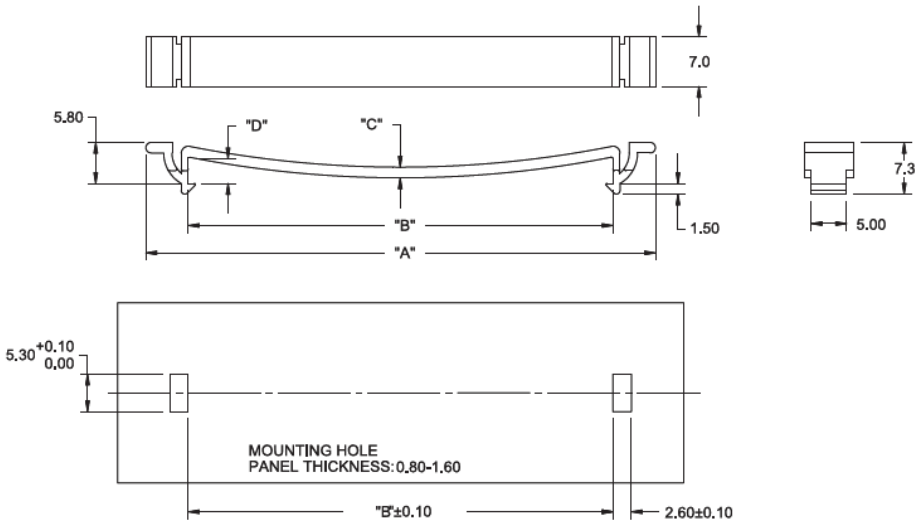

Details:

- **Material: Nylon 6/6, RMS-19***
- **Color: Natural**
- **Standard Pack: 500/Bag**

Symbol	A	B	C	D	Panel thickness range	Material	Flammability	Color
	[mm]	[mm]	[mm]	[mm]	[mm]			
FCCS-5	72	60	1.5	3.7	0.8 - 1.6	PA 66	UL94 V-0	natural