IP Kontakt
Pl. Zwycięstwa 2E
90-312 Łódź
Poland
tel. +48 42 676 75 25
+48 42 674 22 74
+48 42 674 22 88
e-mail: *ipkontakt@ipkontakt.pl*

FBR - Foot, Barbed Mount

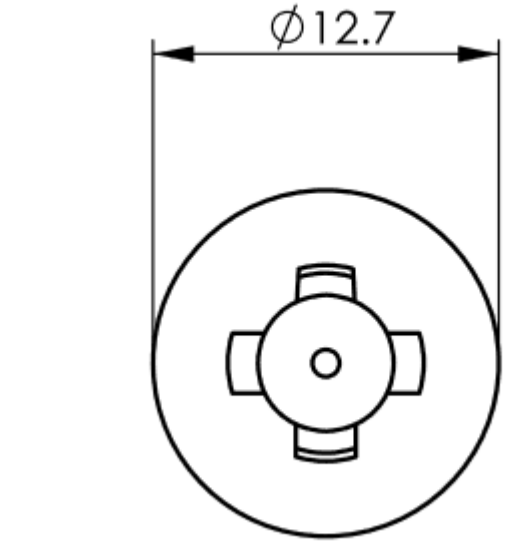



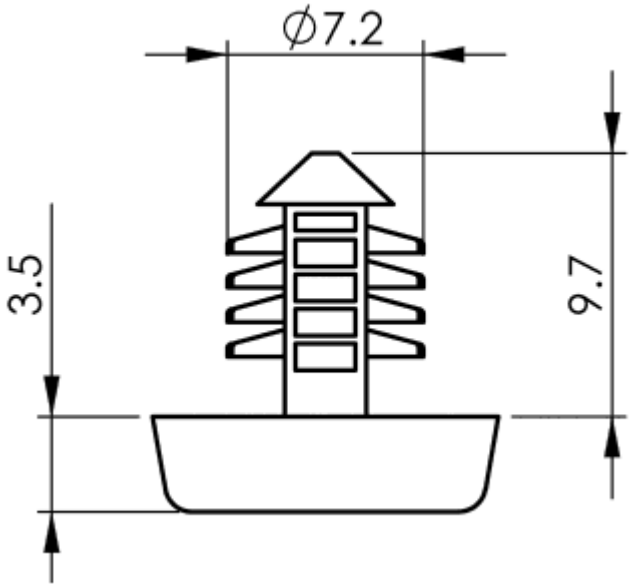

Details:

- **Material: Rivet: UL94 V2 Nylon 6/6, RMS-01***
- **Foot: TPE, RMS-351***
- **Color: Black**
- **Standard Pack: 1000/Bag**

Symbol	Mounting hole diameter ±0.08	Panel thickness range	Material	Color
	[mm]	[mm]		
FBR-1	6.8	10 min.	TPE	black