IP Kontakt
Pl. Zwycięstwa 2E
90-312 Łódź
Poland
tel. +48 42 676 75 25
+48 42 674 22 74
+48 42 674 22 88
e-mail: *ipkontakt@ipkontakt.pl*

F-OK-0130 - Edge Grommets

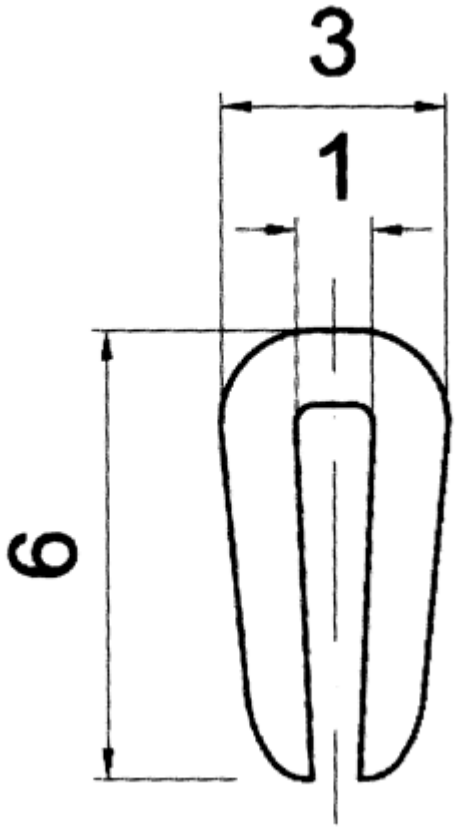

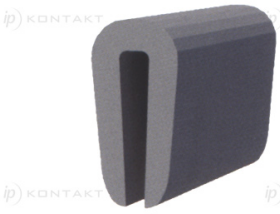

Details:

- **Material: PVC/RUBBER**
- **Colour: black**
- Standard pack: 50 m roll

Symbol	Panel thickness [mm]	Steel clamp	Material	Color	Standard pack [m]
F-OK-0130-CL	1	no	PVC/rubber	transparent	50