IP Kontakt
Pl. Zwycięstwa 2E
90-312 Łódź
Poland
tel. +48 42 676 75 25
+48 42 674 22 74
+48 42 674 22 88
e-mail: *ipkontakt@ipkontakt.pl*

BL-ZRZG - Slotted nut-plugs

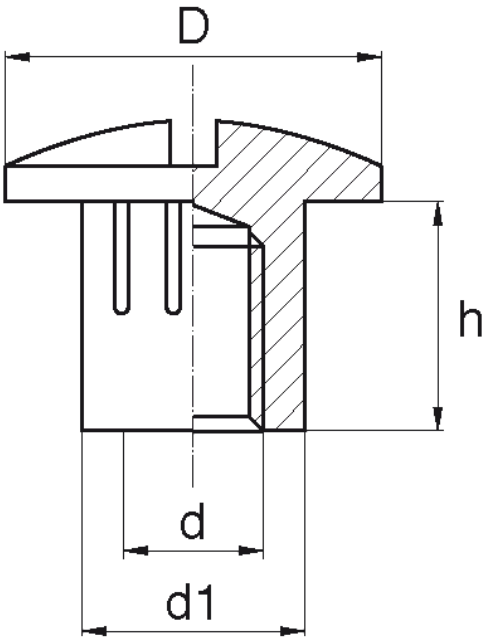

Details:

- **Material: Nylon**
- **Colour: black or white**
- Colours available on special order: grey, red, blue
- For finishing applications
- Light and rustproof
- Good resistance to wear and weather conditions.
- Standard pack: 1000 pcs

Symbol	Thread d	d1	Ext. diameter D	h	Material	Color
		[mm]	[mm]	[mm]		
BL-ZRZG-M8-12-WH	M8	12	20	12	PA	white