IP Kontakt
Pl. Zwycięstwa 2E
90-312 Łódź
Poland

tel. +48 42 676 75 25
+48 42 674 22 74
+48 42 674 22 88
e-mail: *ipkontakt@ipkontakt.pl*

BL-NRAD2 - Knurled thumb nuts

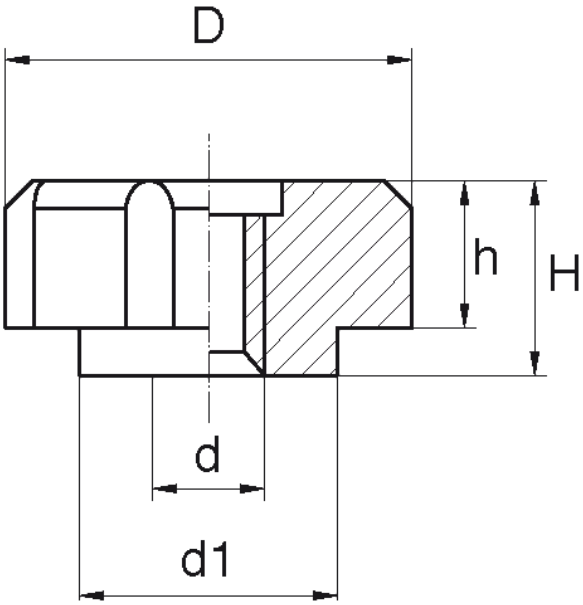

Details:

- **Material: Nylon**
- **Colour: white**
- Colours available on special order: black, natural, red, grey, blue, yellow
- Light and rustproof
- Good mechanical properties
- Resists temperature from -30°C to +100°C
- Standard pack: 1000 pcs

Symbol	Thread d	Ext. diameter D	d1	h	Height H	Material	Color
		[mm]	[mm]	[mm]	[mm]		
BL-NRAD2-M6-200-078	M6	20	10	6	7.8	PA	white