IP Kontakt
Pl. Zwycięstwa 2E
90-312 Łódź
Poland
tel. +48 42 676 75 25
+48 42 674 22 74
+48 42 674 22 88
e-mail: *ipkontakt@ipkontakt.pl*

BL-NMOT2 - Wing nuts

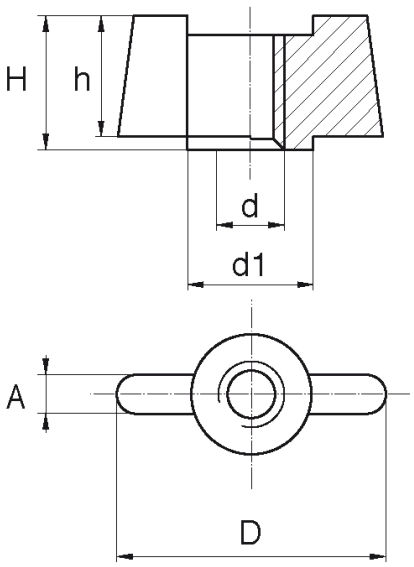



Details:

- **Material: Nylon**
- **Colour: white**
- Colours: black, natural, gray available on special order
- Light and rustproof
- Good mechanical properties
- Resists temperature from - 30°C to + 100°C
- Standard pack: 1000 pcs

Symbol	Thread d	D	d1	h	Height H	A	Material	Color
		[mm]	[mm]	[mm]	[mm]	[mm]		
BL-NMOT2-M6	M6	25	10.5	11.8	13.5	4	PA	white