**IP Kontakt**
Pl. Zwycięstwa 2E
90-312 Łódź
Poland
tel. +48 42 676 75 25
+48 42 674 22 74
+48 42 674 22 88
e-mail: *ipkontakt@ipkontakt.pl*

# BL-NMOT2 - Wing nuts

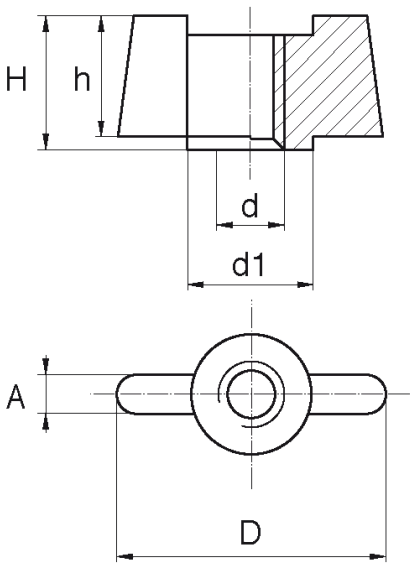




Details:

- **Material: Nylon**
- **Colour: white**
- Colours: black, natural, gray available on special order
- Light and rustproof
- Good mechanical properties
- Resists temperature from - 30°C to + 100°C
- Standard pack: 1000 pcs

| Symbol | Thread d | D | d1 | h | Height H | A | Material | Color |
|---|---|---|---|---|---|---|---|---|
| | | [mm] | [mm] | [mm] | [mm] | [mm] | | |
| BL-NMOT2-M5 | M5 | 25 | 10.5 | 11.8 | 13.5 | 4 | PA | white |