IP Kontakt
Pl. Zwycięstwa 2E
90-312 Łódź
Poland
tel. +48 42 676 75 25
+48 42 674 22 74
+48 42 674 22 88
e-mail: *ipkontakt@ipkontakt.pl*

BIB - Blind Install Bumper

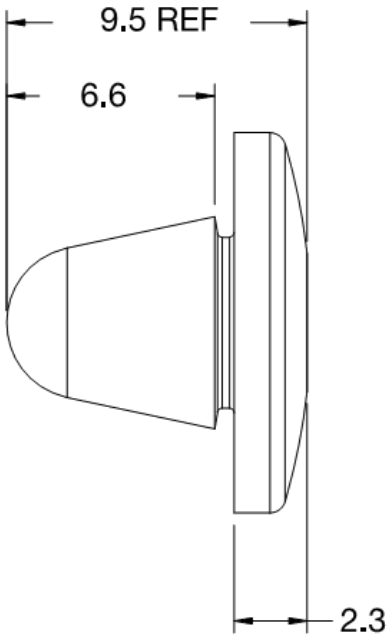

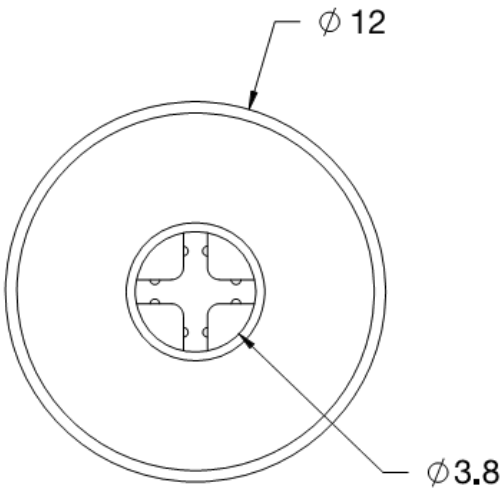



Details:

- **Material: Silicone Rubber,45 Shore A, RMS-364***
- **Color: Black**
- **Standard Pack: 1000/Bag**

Symbol	Ext. diameter	Mounting hole diameter range	Panel thickness range	Material	Shore A hardness	Color
	[mm]	[mm]	[mm]			
BIB-1	12	5 - 5.4	0.06 - 0.8	silicone rubber	45	black