IP Kontakt
Pl. Zwycięstwa 2E
90-312 Łódź
Poland
tel. +48 42 676 75 25
+48 42 674 22 74
+48 42 674 22 88
e-mail: *ipkontakt@ipkontakt.pl*

BF - Big Foot

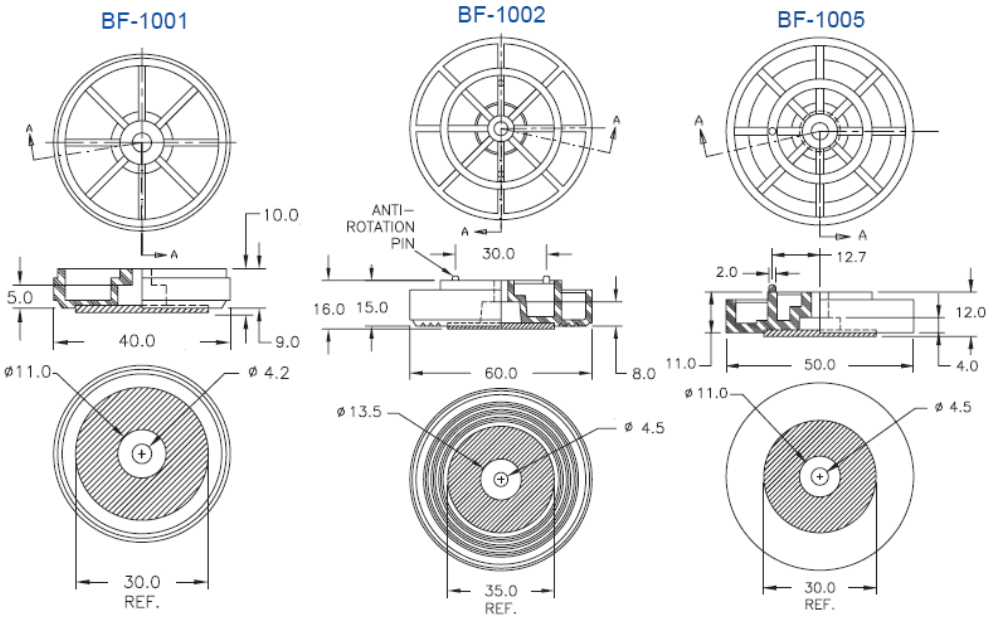



Details:

- **Foot Material: ABS UL94HB, RMS-114***
- **Cushion Material: Nylon Fiber, RMS-240***
- **Recommended Mounting Screw: #8 or M4 Pan Head**
- **Load Capacity: 10 kg.**
- **Color: Black**
- **Standard Pack: 100/Bag**

Symbol	Max. load [kg]	Material	Flammability	Color
BF-1005	10	ABS	UL94 HB	black