IP Kontakt
Pl. Zwycięstwa 2E
90-312 Łódź
Poland
tel. +48 42 676 75 25
+48 42 674 22 74
+48 42 674 22 88
e-mail: *ipkontakt@ipkontakt.pl*

FP-051 - Wire or pipe clip with screw fixing

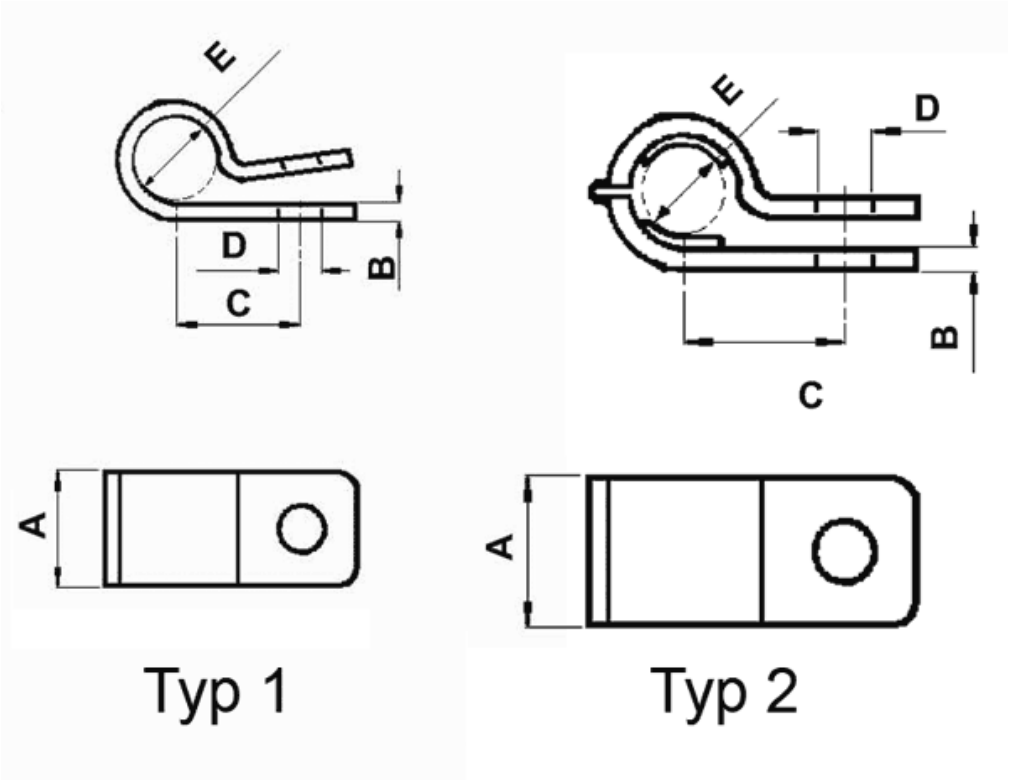

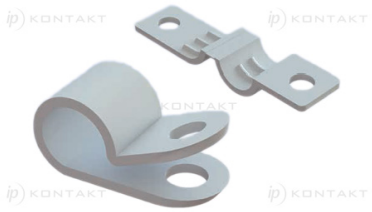

Details:

- **Material: PA66 UL94V2**
- **Color: natural**
- Dimension "E" - cable bundle maximum diameter
- 6567AA00 has two mounting holes
- Working temperature: -35°C to +85°C

Symbol	Type	A	B	C	D	Cable diameter range E	Material	Flammability	Color	Standard pack
		[mm]	[mm]	[mm]	[mm]	[mm]				[szt./pcs]
4742AA00	1	12.7	1.5	21.4	5.3	17.8	PA 66	UL94 V-2	natural	1000