IP Kontakt
Pl. Zwycięstwa 2E
90-312 Łódź
Poland
tel. +48 42 676 75 25
+48 42 674 22 74
+48 42 674 22 88
e-mail: *ipkontakt@ipkontakt.pl*

FP-3574 - Unhookable hinges

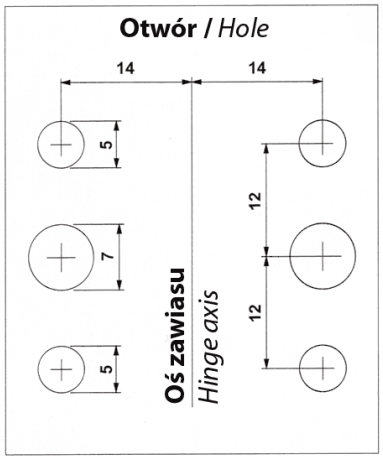

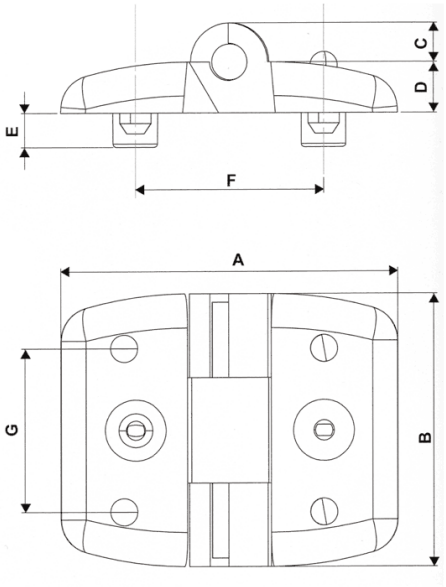



Details:

- **Material: PA 6.6**
- **Colour: black**
- **Flammability: UL94 V-2**
- The two part of this hinge are supplied uncoupled and they are assembled using a single self-tapping screw.
- The hinge’s normal use foresses the possibility of hooking and unhooking the two parts for special requirements of use.
- Standard pack: 500 pcs

Symbol	A	B	C	D	E	F	G	Material	Flammability	Color
	[mm]	[mm]	[mm]	[mm]	[mm]	[mm]	[mm]			
3574AA01QS	50	40	5.5	7.5	6.8	28	24	PA 66	UL94 V-2	black