IP Kontakt
Pl. Zwycięstwa 2E
90-312 Łódź
Poland
tel. +48 42 676 75 25
+48 42 674 22 74
+48 42 674 22 88
e-mail: *ipkontakt@ipkontakt.pl*

FP-16464 - Snap-fit grommets IP67

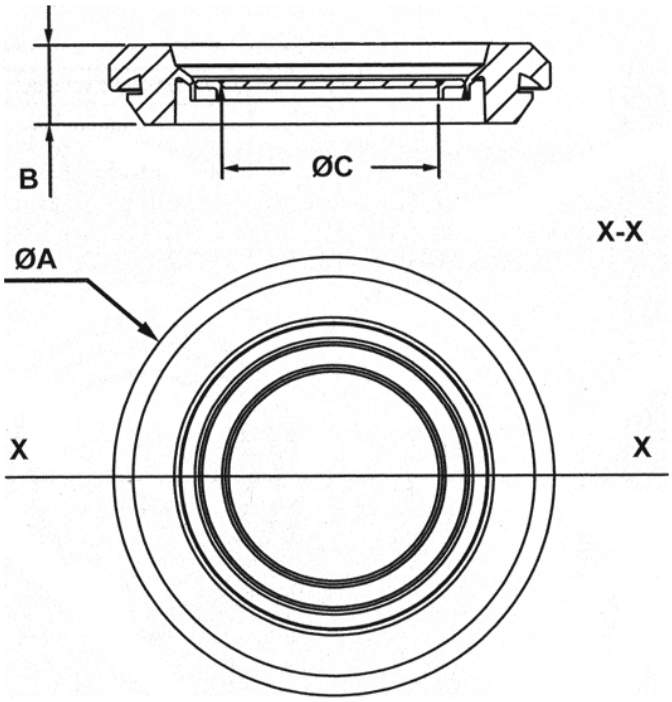



Details:

- **Material: TPE**
- **Colour: black (RAL 9011), grey (RAL 7065), white**
- Working temperature: -40°C to +100°C
- Protection grade: IP67
- For mounting holes with diameters of 100 and 120 mm protecton grade is IP54

Symbol	Mounting hole diameter	Panel thickness range	ØA	B	ØC	Material	Flammability	Color	Standard pack
	[mm]	[mm]	[mm]	[mm]	[mm]				[szt./pcs]
22002PF019011	20	1.5 - 4.5	27.5	11	5.0 - 12.0	TPE	-	black	500