IP Kontakt
Pl. Zwycięstwa 2E
90-312 Łódź
Poland
tel. +48 42 676 75 25
+48 42 674 22 74
+48 42 674 22 88
e-mail: *ipkontakt@ipkontakt.pl*

FP-11232 - Pull Mount Bumper

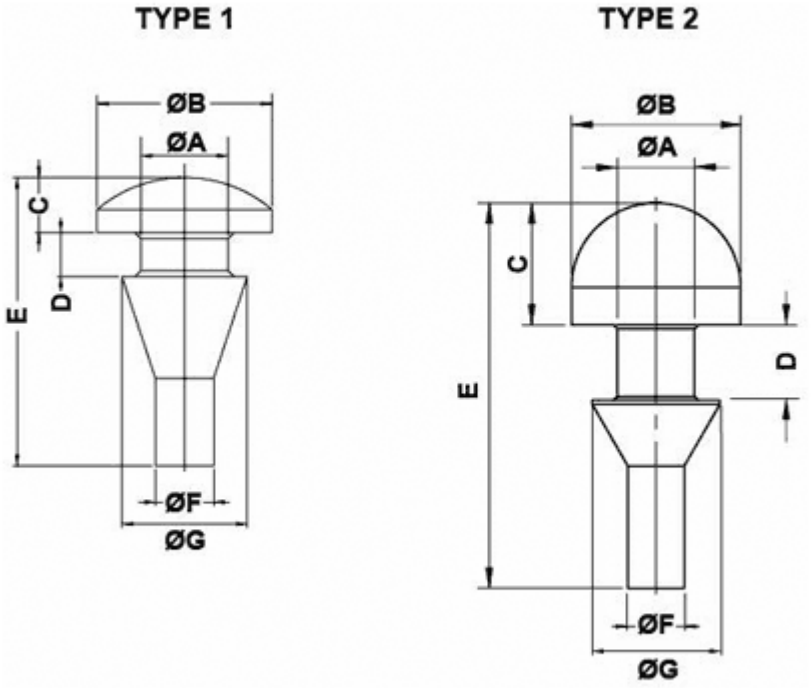



Details:

- **Material: see table**
- **Kolor: black**
- Working temperature:
  - EPDM: -40°C do +120°C
  - NBR: -35°C do +110°C
- Standard pack: see table

Symbol	Type	Head diameter ØA	Mounting hole diameter ØB	Head height C	Panel thickness D	E	ØF	ØG	Material	Shore A hardness	Color	Standard pack
		[mm]	[mm]	[mm]	[mm]	[mm]	[mm]	[mm]				[szt./pcs]
11234NR01	2	3.7	7	3.5	2.8	14.5	3.2	5.2	NBR	80	black	5000