IP Kontakt
Pl. Zwycięstwa 2E
90-312 Łódź
Poland
tel. +48 42 676 75 25
+48 42 674 22 74
+48 42 674 22 88
e-mail: *ipkontakt@ipkontakt.pl*

FP-10689 - Cable holder push mount

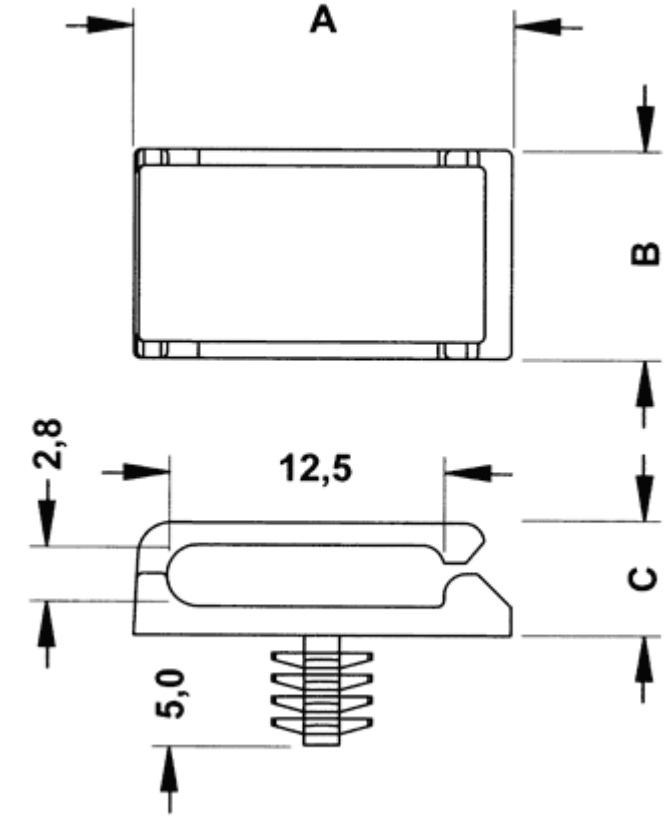

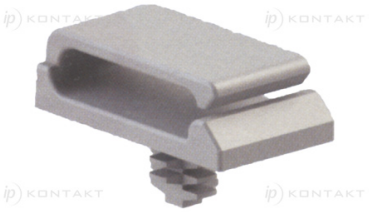

Details:

- **Material: PA 6.6 UL94V2**
- **Color: natural**
- Working temperature: -35°C - 85°C
- Standard pack: 1000 pcs

Symbol	A	B	C	Mounting hole diameter	Panel thickness range	Material	Flammability	Color
	[mm]	[mm]	[mm]	[mm]	[mm]			
10689AA00	17	9.5	5.1	4	0.5 - 4.0	PA 66	UL94 V-2	natural