IP Kontakt
Pl. Zwycięstwa 2E
90-312 Łódź
Poland
tel. +48 42 676 75 25
+48 42 674 22 74
+48 42 674 22 88
e-mail: *ipkontakt@ipkontakt.pl*

FP-10677 - Flat cable clip

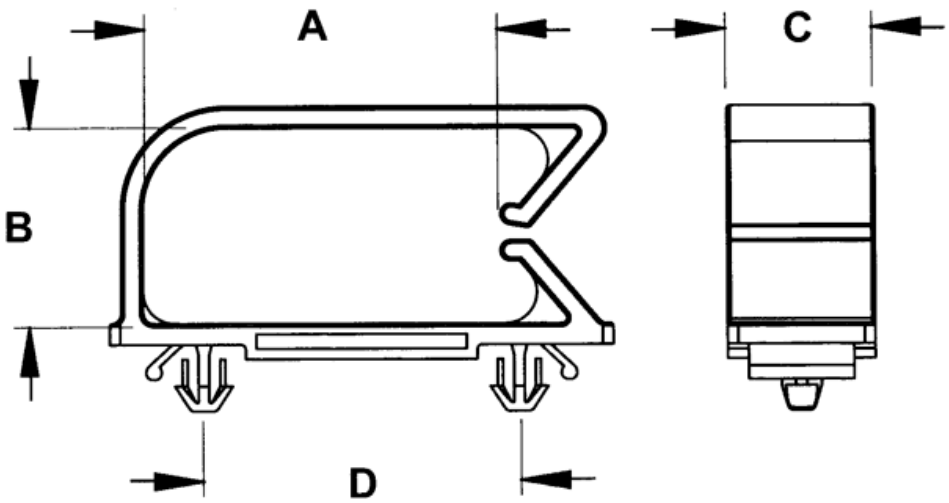

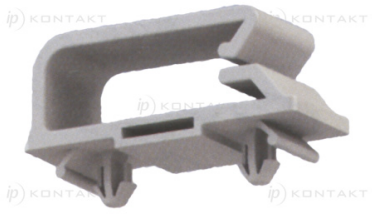

Details:

- **Material: PA 6.6 UL94V2**
- **Color: black**
- Working temperature: -35°C - 85°C
- Standard pack: 500 pcs

Symbol	A	B	C	D	Mounting hole diameter	Panel thickness range	Material	Flammability	Color
	[mm]	[mm]	[mm]	[mm]	[mm]	[mm]			
10678AA01	24	18.7	14	20	4	0.8 - 2.0	PA 66	UL94 V-2	black