IP Kontakt
Pl. Zwycięstwa 2E
90-312 Łódź
Poland
tel. +48 42 676 75 25
+48 42 674 22 74
+48 42 674 22 88
e-mail: *ipkontakt@ipkontakt.pl*

FP-10668 - Cable holder push mount

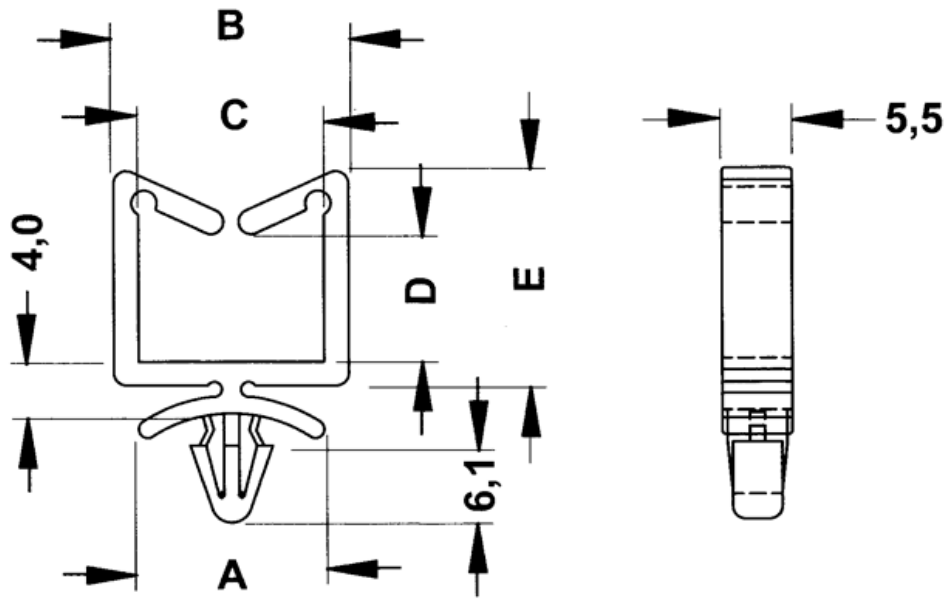

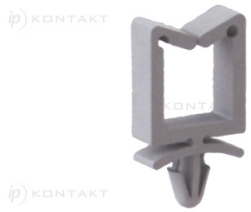

Details:

- **Material: PA 6.6 UL94V2**
- **Color: natural**
- Working temperature: -35°C - 85°C
- Standard pack: 500 pcs

Symbol	A	B	C	D	E	Mounting hole diameter range	Panel thickness range	Material	Flammability	Color
	[mm]	[mm]	[mm]	[mm]	[mm]	[mm]	[mm]			
10670AA00	14.7	19.7	15.7	11.3	18.2	4.8 - 5.0	1.2 - 2.1	PA 66	UL94 V-2	natural