IP Kontakt
Pl. Zwycięstwa 2E
90-312 Łódź
Poland
tel. +48 42 676 75 25
+48 42 674 22 74
+48 42 674 22 88
e-mail: *ipkontakt@ipkontakt.pl*

FP-1043 - Knurled cap

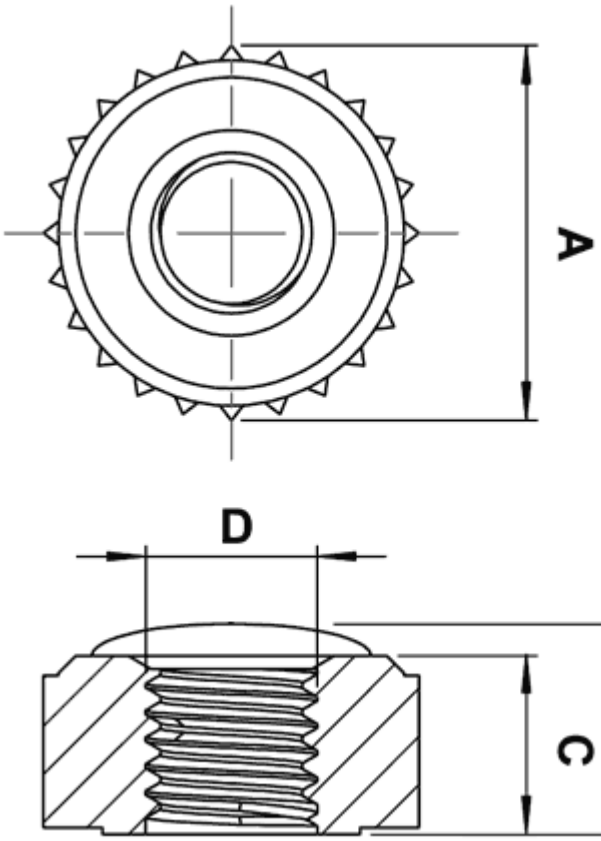



Details:

- **Material: PA 6.6 25%GF**
- **Flammability: UL94HB**
- **Color: white or black**
- Working temperature: -35°C to +100°C
- Standard pack: 1000 pcs

Symbol	A	Height B	Thread length C	Thread D	Material	Flammability	Color
	[mm]	[mm]	[mm]				
1047BB01	17.5	10	8.3	M8	PA 66 + GF	UL94 HB	black