**IP Kontakt**
Pl. Zwycięstwa 2E
90-312 Łódź
Poland
tel. +48 42 676 75 25
+48 42 674 22 74
+48 42 674 22 88
e-mail: *ipkontakt@ipkontakt.pl*

# FP-1043 - Knurled cap

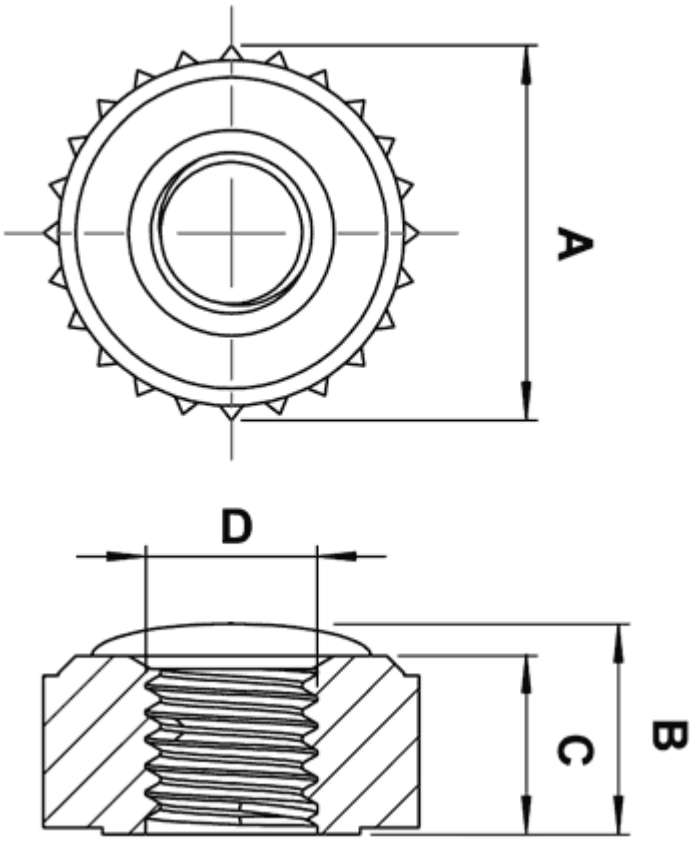




Details:

- **Material: PA 6.6 25%GF**
- **Flammability: UL94HB**
- **Color: white or black**
- Working temperature: -35°C to +100°C
- Standard pack: 1000 pcs

| Symbol | A | Height B | Thread length C | Thread D | Material | Flammability | Color |
|---|---|---|---|---|---|---|---|
| | [mm] | [mm] | [mm] | | | | |
| 1043BB01 | 8 | 4 | 3 | M3 | PA 66 + GF | UL94 HB | black |