IP Kontakt
Pl. Zwycięstwa 2E
90-312 Łódź
Poland
tel. +48 42 676 75 25
+48 42 674 22 74
+48 42 674 22 88
e-mail: *ipkontakt@ipkontakt.pl*

FP-10403 - Knurled nuts

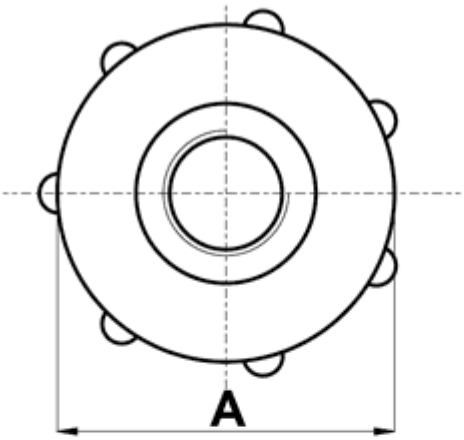

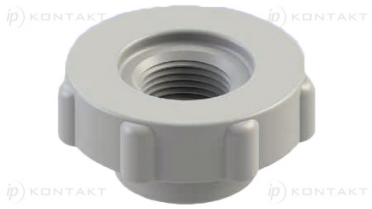

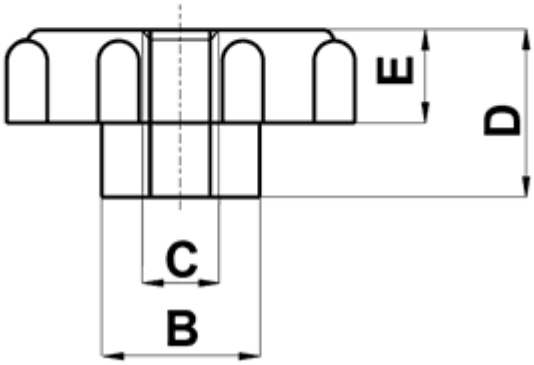

Details:

- **Material: PA 6**
- **Color: natural**
- Working temperature: -30°C to +100°C
- Standard pack: 1000 pcs

Symbol	A	B	Thread C	Height D	E	Material	Color	Notes
	[mm]	[mm]		[mm]	[mm]			
10410AA00	24	10	M6	7.5	5.7	PA 6	natural	DIN 467