**IP Kontakt**
Pl. Zwycięstwa 2E
90-312 Łódź
Poland
tel. +48 42 676 75 25
+48 42 674 22 74
+48 42 674 22 88
e-mail: *ipkontakt@ipkontakt.pl*

# FP-10382 - Knurled nuts

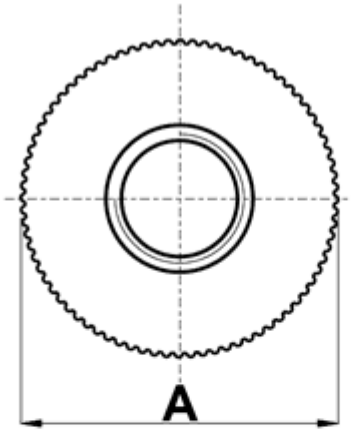


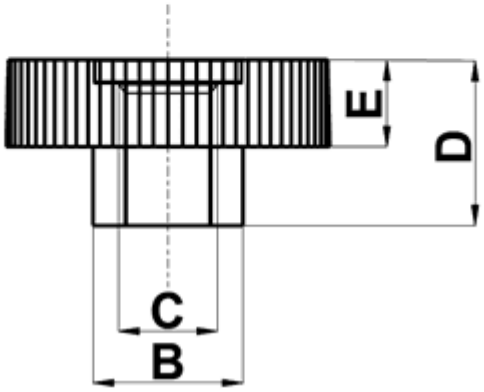




Details:

- **Material: PA 6**
- **Color: natural**
- Working temperature: -30°C to +100°C
- Standard pack: 1000 pcs

| Symbol | A | B | Thread C | Height D | E | Material | Color | Notes |
|---|---|---|---|---|---|---|---|---|
| | [mm] | [mm] | | [mm] | [mm] | | | |
| 10391AA00 | 14 | 8.5 | M4 | 5 | 3.5 | PA 6 | natural | DIN 467 |